ULTIMA series **freestanding** labware washing systems

LANCER
GETINGE GROUP

Maximum capacity. One-touch simplicity.

Professional cleaning performance.

Integrated systems, repeatable results.

From quality control to general laboratory research, Lancer ULTIMA series washers meet space and budget requirements in laboratories performing a range of critical applications where clean labware is essential. Typical applications include analytical chemistry, quality control, pharmaceutical and environmental science laboratories, wastewater treatment, food and beverage analysis, public health and consumer product testing facilities.

The exclusive Prolux programmable microprocessor controller commands a full range of prewash, wash, rinse and drying functions through simple touchscreen menus on all ULTIMA series washers. The convenience of four preset programs for light to heavy loads simplifies operation, while more complex programs can be customized whenever needed to meet specific applications.

Washer Function and Flexibility

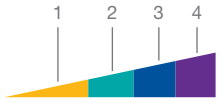

4 Factory Preset Programs
light, moderate, normal, heavy and dozens more as desired

Lancer model 1300 LX freestanding labware washer, shown with accessory loading rack, sold separately.

Lancer model 1400 LXP freestanding labware washer, shown with accessory loading rack, sold separately.

Prolux programmable microprocessor controller with intuitive touchscreen user interface.

Control screen shows actual cycle performance, alarm events. Data is captured for documentation and communication.

Preset or user programmed cycles are fully adjustable to permit multiple combinations of prewash, wash, rinse, acid rinse, purified final rinse, HEPA filtered forced air drying, controlled duration, temperature and more.

High efficiency powerful fluid circulation with direct fluid path and rear manifold connections deliver optimal pressure and flow rates.

Injector jet performance provides inside out wash and rinse functions.

Stainless steel top and bottom spray arms and multiple levels of injection washing ensure thorough spray coverage.

Two integrated automatic chemical dosing pumps are standard on all models. Convenient on-board chemical storage beneath chamber saves space.

View-In-Process Window

An optional View-In-Process (VIP) window includes an interior LED light for visual verification of the interior load during the cycle.

Uncommon selection, common controls.

The Lancer ULTIMA series freestanding washers include five high-performance models that offer a range of labware loading options using baskets, injector racks or combination racks for the best high capacity processing of multiple labware types in the industry.

Quiet Operation.
Noise reduction design minimizes sound for quiet operation.

Cool Surface.
High-performance insulation contains heat and limits energy consumption.

910 LX / 1300 LX Features

Prolux Control Interface
316L Stainless Steel, Fold-down Door
Forced-air Drying, Injectors, HEPA Filtered

1400 LXP / 1600 LXP Features

Prolux Plus Control Interface
316L Stainless Steel, Fold-down Door
Forced-air Drying, Injectors, HEPA Filtered

1800 LXA Features

Prolux Plus Control Interface
High Impact Glass, Vertical Sliding Doors
Forced-air Drying, Injectors, HEPA Filtered

Capacity Comparison

Model	Volume	Interior (W x H x D)	Positions	Wash Levels	Configurations
910 LX	*5.7 cu. ft. (160 L)*	*21.1" x 21.4" x 20.5" (535 x 544 x 520 mm)*	3	2	3
1300 LX	*6.4 cu. ft. (180 L)*	*21" x 25.4" x 20.5" (535 x 644 x 520 mm)*	4	3	5
1400 LXP	*10.7 cu. ft. (304 L)*	*24.6" x 30.4" x 24.8" (626 x 773 x 629 mm)*	4	3	6
1600 LXP *w/optional height extension*	*14.4 cu. ft. (408 L)* *18.6 cu. ft. (528 L)*	*27.7" x 33.8" x 26.7" (703 x 858 x 678 mm)* *27.7" x 43.6" x 26.7" (703 x 1108 x 678 mm)*	5	4	12
1800 LXA	*16.2 cu. ft. (458 L)*	*43.3" x 31.2" x 20.7" (1100 x 793 x 526 mm)*	4 x 2	3 x 2	20*

** Three racks each side; six configurations each side.*

Models shown (left to right) 910 LX, 1300 LX, 1400 LXP, 1600 LXP with optional VIP window; 1800 LXA, glass door standard.

Small spaces, **impressive capacity.**

910 LX

Drawings display front and side of unit, with door swing allowance.

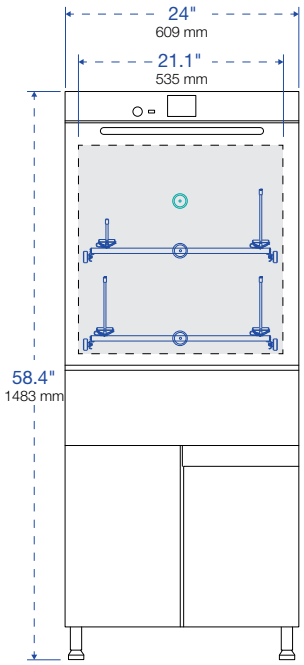

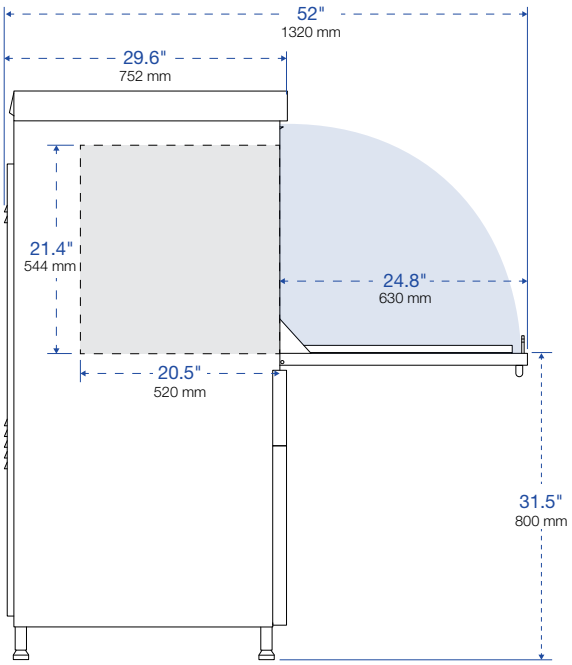

Model	Specifications									
	Interior Dimensions W x H x D	Exterior Dimensions W x H x D	Water Per Fill* gal (L)	Programs presets	Programs custom	208V 1-phase	208V 3-phase	240V 1-phase	240V 3-phase	480V 3-phase
910 LX	21.1" x 21.4" x 20.5" 535 x 544 x 520 mm	24" x 58.4" x 29.6" 609 x 1483 x 752 mm	3.4 (13)	4	36	☐	☐	☐	☐	–

* Because Lancer calculates total water consumption per fill based on reservoir sump and all fluid path fill volumes, care should be taken when evaluating comparative water consumption claims.

Stainless steel top and bottom spray arms on all models ensure complete washing and rinsing of glassware exterior and interior of large mouthed glassware.

910 LX

Wash load configurations.

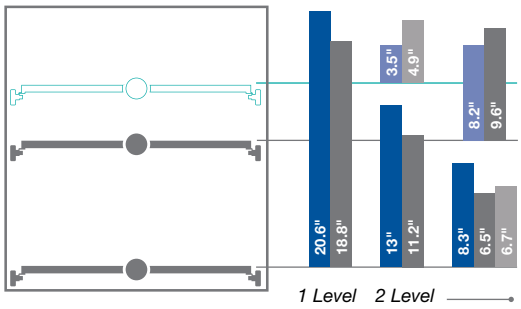

PST Basic basket
PSBT Basic basket with spray arm
IXL Injection rack (long jets)
IXC Injection rack (short jets)

Sound Level <63 dB(A)

Model	Cycle Function				Chemical Dosing				Net Weight
	Wash Temp. max. °C/°F	**Rinse** purified water	**Rinse** acid	**Drying**	**Automatic** pumps	**On-Board** chemical storage	**Level Sensors**	**Water Softener**	**Empty** lb (kg)
910 LX	95°C / 203°F	■	■	forced-air chamber and injectors; HEPA filtered	2 (max 2)	■	2	■	315 143

■ / □ Standard / Optional Features

Compact footprint, lasting impression.

1300 LX

Drawings display front and side of unit, with door swing allowance.

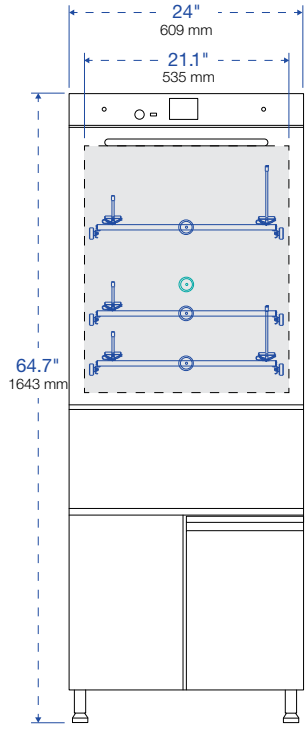

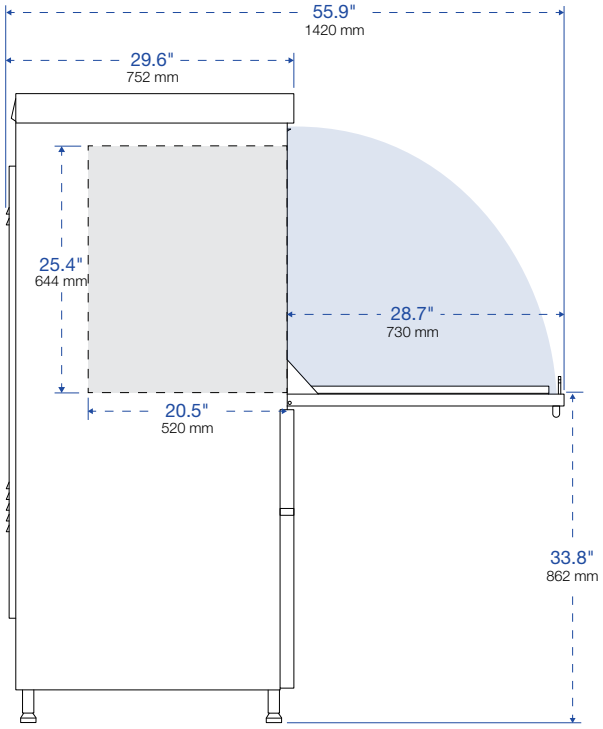

Model	Specifications									
	Interior Dimensions W x H x D	**Exterior Dimensions** W x H x D	**Water Per Fill*** gal (L)	**Programs** presets	custom	**208V** 1-phase	**208V** 3-phase	**240V** 1-phase	**240V** 3-phase	**480V** 3-phase
1300 LX	21" x 25.4" x 20.5" 535 x 644 x 520 mm	24" x 64.7" x 29.6" 609 x 1643 x 752 mm	4 (15)	4	36	☐	☐	☐	☐	☐

* Because Lancer calculates total water consumption per fill based on reservoir sump and all fluid path fill volumes, care should be taken when evaluating comparative water consumption claims.

For maximum connectivity, all ULTIMA series washers include two USB (3.0) ports, one conveniently located on the front panel for easy access and transfer of cleaning process documentation, including cycle parameters, cycle number, date and time, phase duration, temperature for each phase, and detergent and acid intake.

1300 LX

Wash load configurations.

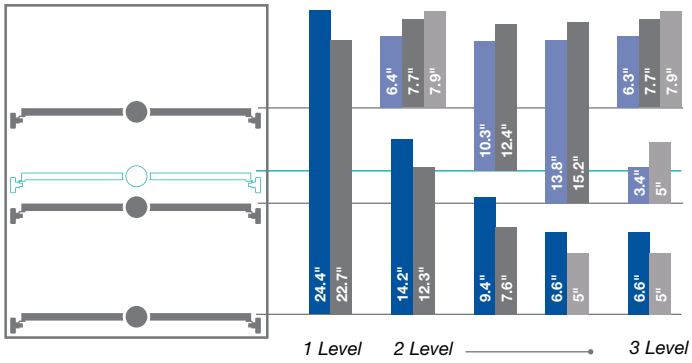

PST Basic basket
PSBT Basic basket with spray arm
IXL Injection rack (long jets)
IXC Injection rack (short jets)

Sound Level
<63 dB(A)

Model	Cycle Function				Chemical Dosing				Net Weight
	Wash Temp. max. °C/°F	Rinse purified water	Rinse acid	Drying	Automatic pumps	On-Board chemical storage	Level Sensors	Water Softener	Empty lb (kg)
1300 LX	95°C / 203°F	■	■	forced-air chamber and injectors; HEPA filtered	2 (max 3)	■	2	□	319 145

■ / □ Standard / Optional Features

Space efficiency, multi-level loading.

1400 LXP

Drawings display front and side of unit, with door swing allowance.

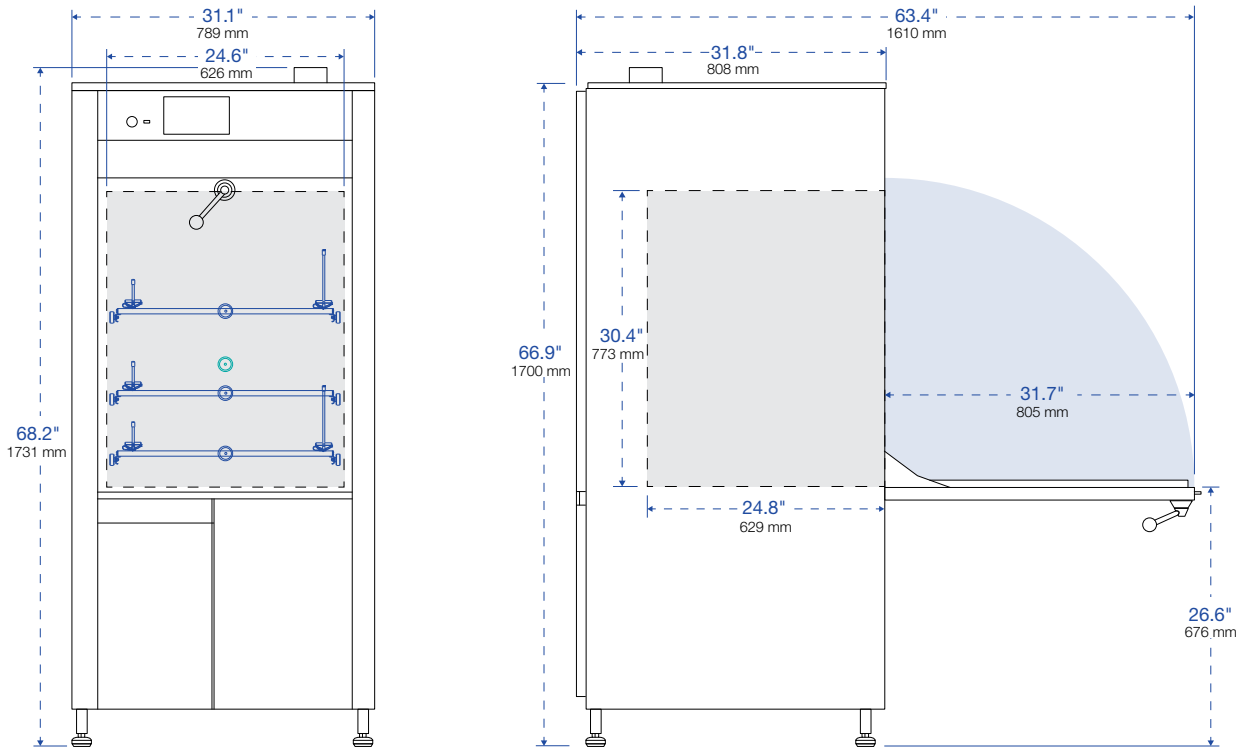

Model	Specifications									
	Interior Dimensions W x H x D	**Exterior Dimensions** W x H x D	**Water Per Fill*** gal (L)	**Programs** presets	custom	**208V** 1-phase	**208V** 3-phase	**240V** 1-phase	**240V** 3-phase	**480V** 3-phase
1400 LXP	24.6" x 30.4" x 24.8" 626 x 773 x 629 mm	31.1" x 68.2" x 31.8" 789 x 1731 x 808 mm	5.2-6.6 (20-25)	4	36	—	☐	—	☐	☐

* Because Lancer calculates total water consumption per fill based on reservoir sump and all fluid path fill volumes, care should be taken when evaluating comparative water consumption claims.

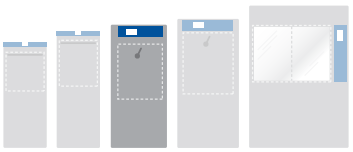

All ULTIMA series labware washers feature telescopic runners with advanced design for smooth and easy function as well as innovative rack stops for safety and ergonomics.

1400 LXP

Wash load configurations.

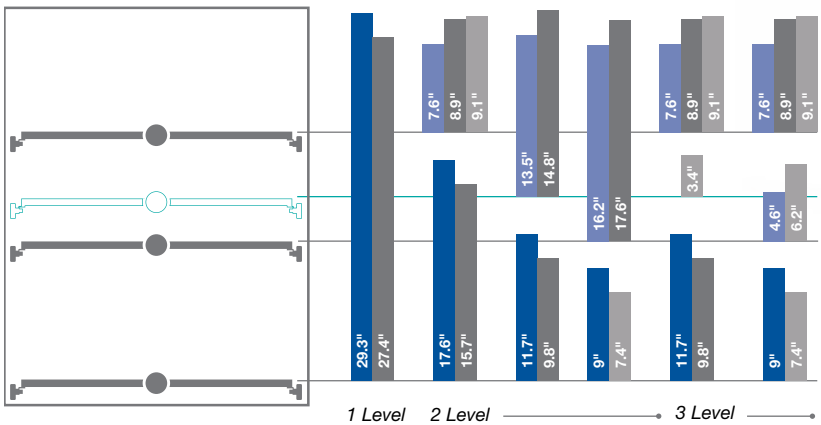

PST Basic basket
PSBT Basic basket with spray arm
IXL Injection rack (long jets)
IXC Injection rack (short jets)

Sound Level
<63 dB(A)

Model	Cycle Function				Chemical Dosing				Net Weight
	Wash Temp. max. °C/°F	Rinse purified water	Rinse acid	Drying	Automatic pumps	On-Board chemical storage	Level Sensors	Water Softener	Empty lb (kg)
1400 LXP	95°C / 203°F	■	■	forced-air chamber and injectors; HEPA filtered	2 (max 5)	■	2	□	469 213

■ / □ Standard / Optional Features

Maximum **flexibility.**

1600 LXP

Drawings display front and side of unit, with door swing allowance.
** Drawing does not include optional chamber height extension.*

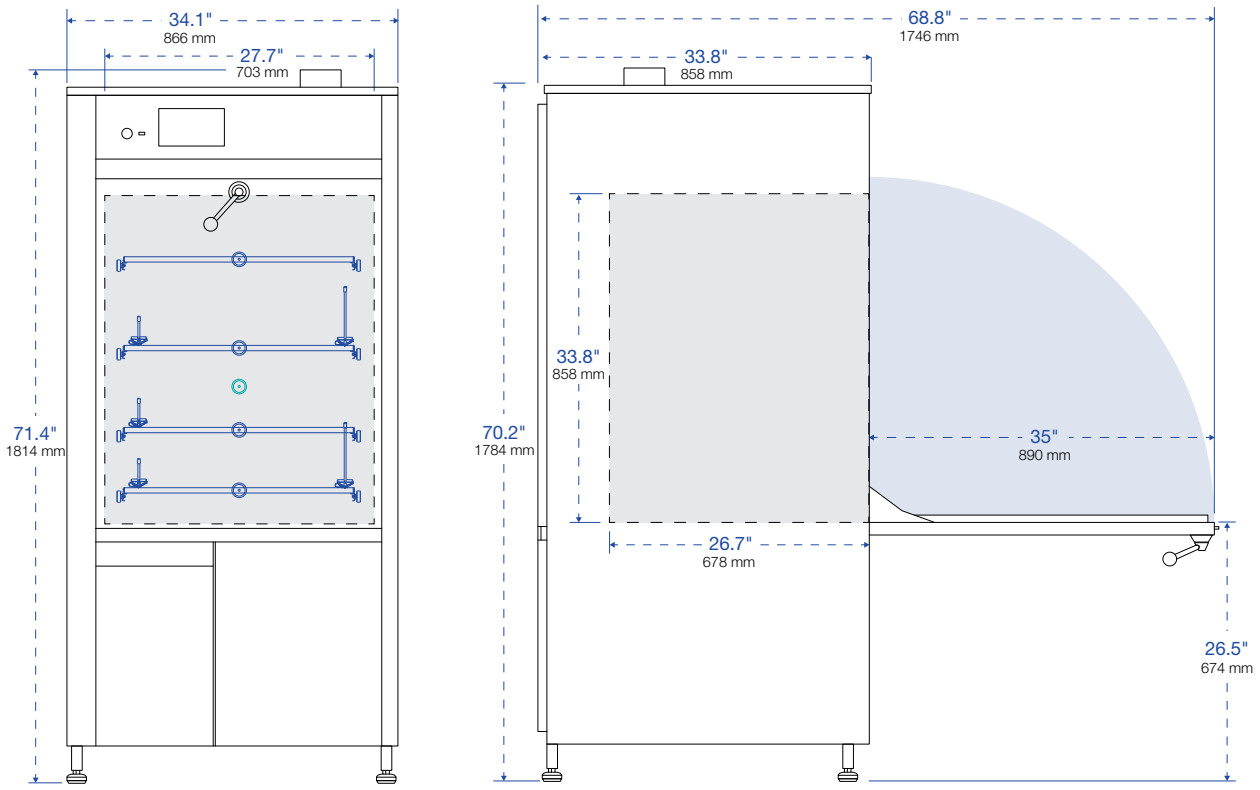

Model	Specifications									
	Interior Dimensions W x H x D	Exterior Dimensions W x H x D	Water Per Fill* gal (L)	Programs presets	Programs custom	208V 1-phase	208V 3-phase	240V 1-phase	240V 3-phase	480V 3-phase
1600 LXP	27.7" x 33.8" x 26.7" 703 x 858 x 678 mm	34.1" x 71.4" x 33.8" 866 x 1814 x 858 mm	7.9-9.2 (30-35)	4	36	–	☐	–	☐	☐
w/ optional height extension	27.7" x 43.6" x 26.7" 703 x 1108 x 678 mm	34.1" x 81.3" x 33.8" 866 x 2064 x 858 mm								

* Because Lancer calculates total water consumption per fill based on reservoir sump and all fluid path fill volumes, care should be taken when evaluating comparative water consumption claims.

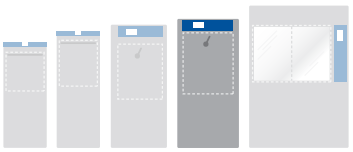

9.8" (250 mm)

Model 1600 LXP with optional height extension increases chamber, door and unit height by 9.8" (250 mm).

1600 LXP

Wash load configurations. Measurements valid for units without the optional height extension.

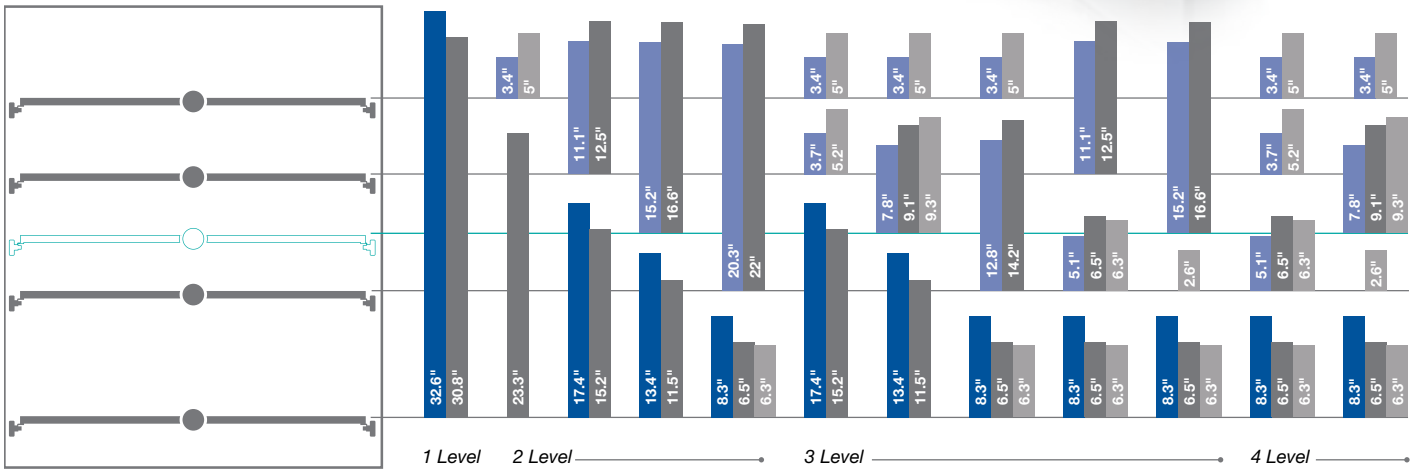

- PST Basic basket
- PSBT Basic basket with spray arm
- IXL Injection rack (long jets)
- IXC Injection rack (short jets)

Sound Level <69 dB(A)

Model	Cycle Function				Chemical Dosing				Net Weight
	Wash Temp. max. °C/°F	Rinse purified water	Rinse acid	Drying	Automatic pumps	On-Board chemical storage	Level Sensors	Water Softener	Empty lb (kg)
1600 LXP	95°C / 203°F	■	■	forced-air chamber and injectors; HEPA filtered	2 (max 5)	■	2	□	474 215
w/ optional height extension									529 240

■ / □ Standard / Optional Features

Vanishing door, easy to load.

1800 LXA

Drawings display front and side of unit, with door swing allowance.
** Drawing does not include optional steam condenser.*

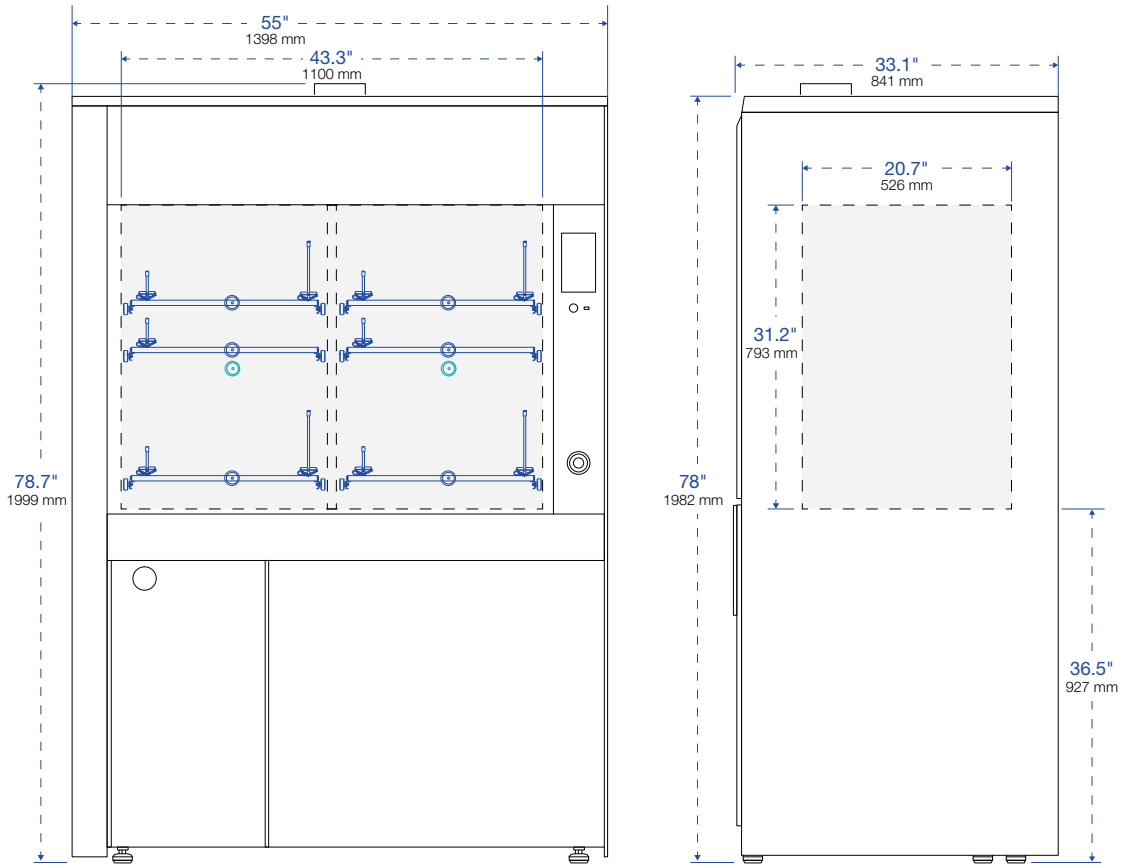

Model	Specifications									
	Interior Dimensions W x H x D	**Exterior Dimensions** W x H x D	**Water Per Fill*** gal (L)	**Programs** presets	custom	**208V** 1-phase	**208V** 3-phase	**240V** 1-phase	**240V** 3-phase	**480V** 3-phase
1800 LXA	43.3" x 31.2" x 20.7" 1100 x 793 x 526 mm	55" x 78.7" x 33.1" 1398 x 1999 x 841 mm	10.5 (40)	4	36	—	☐	—	☐	☐
w/ optional condenser	43.3" x 31.2" x 20.7" 1100 x 793 x 526 mm	55" x 91.1" x 35" 1398 x 2315 x 891 mm								

* Because Lancer calculates total water consumption per fill based on reservoir sump and all fluid path fill volumes, care should be taken when evaluating comparative water consumption claims.

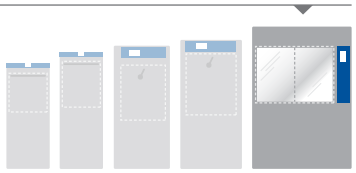

The dual pane glass door opens easily by sliding vertically into the cabinet beneath the loading chamber. This design eliminates the need for additional floor space in front or head space above the washer.

1800 LXA

Wash load configurations per side. Three racks each side; six configurations each rack.

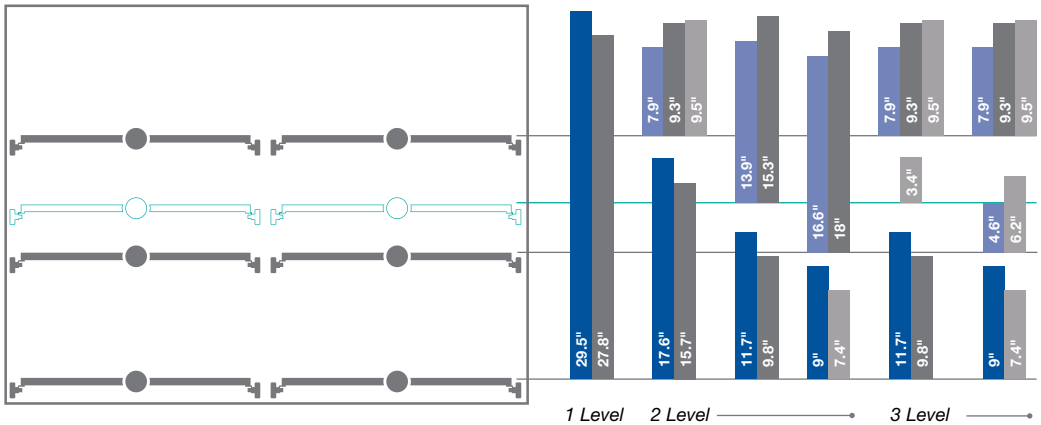

PST Basic basket
PSBT Basic basket with spray arm
IXL Injection rack (long jets)
IXC Injection rack (short jets)

Sound Level
<65 dB(A)

Model	Cycle Function				Chemical Dosing				Net Weight
	Wash Temp. max. °C/°F	Rinse purified water	Rinse acid	Drying	Automatic pumps	On-Board chemical storage	Level Sensors	Water Softener	Empty lb (kg)
1800 LXA	95°C / 203°F	■	■	forced-air chamber and injectors; HEPA filtered	2 (max 5)	■	2	□	805 365
w/ optional condenser									915 415

■ / □ Standard / Optional Features

Repeatable results, with reliability, safety and high throughput.

Ergonomic Loading Configurations. Unlike oversized washers with less efficient loading patterns, Lancer ULTIMA series freestanding labware washers are designed for high-density loading and the most effective use of available interior space. This efficiency maximizes throughput and reduces capital investments, operating costs and the amount of dedicated lab space needed.

- Telescoping load-bearing rails permit extension of racks for easy loading with or without an optional trolley.
- All racks are interchangeable between wash levels thereby minimizing the need for additional accessories.
- Racks for Lancer ULTIMA series undercounter models and freestanding models 910 LX, 1300 LX and 1800 LXA are interchangeable.
- The fold-down door creates a platform for proper rack positioning and more comfortable loading and unloading.

Cleaning Performance and Safety. Operating systems are designed for performance, efficiency and high throughput.

- An automatic door lock prevents door opening during active cycles and protects the user from heat and chemical exposure.
- Top and bottom stainless steel spray arms are pressurized to provide exterior coverage to the labware.
- Injector rack manifold connections are located at the rear for proper alignment and the most efficient pressure and flow.
- Washing temperature can be set to a maximum of 95°C (203°F) if required for more difficult soils.
- Automatic Peristaltic pumps are self-contained for accurate and repeatable dosing of detergents or acids required by each cycle.
- Multiple DI rinses can be programmed to eliminate interior and exterior spotting.

The front-loading door folds down to create an ergonomically stable platform for proper rack positioning and easier loading, eliminating the need for a trolley to load or unload glassware. (Does not apply to model 1800 LXA with vertical sliding door.)

Alarms and Monitoring.

- The high resolution touchscreen color display is easy to read from a distance.
- The intuitive graphic user interface creates a series of visual performance indicators such as active program, time remaining, warning, alarm and cycle completed functions.
- Four preset programs permit one touch operation. Additional cycles are programmed from the graphic user interface.
- An integrated USB port allows easy front panel access for process tracking and data logging. Optional process record printouts available through USB or Ethernet ports are managed by the Prolux controller.

Construction. The sump, spray arms, interior chamber and door are fabricated from 316L stainless steel to resist aggressive chemicals and residues.

- Exterior 304L stainless steel panels resist corrosion, simplify cleaning and protect electrical and plumbing components.
- Double-wall insulated assembly confines heat loss and minimizes noise.
- Easy access stainless steel chamber filters extend washer life by protecting pumps and interior plumbing from debris.
- A compact liquid sump and direct fluid path minimizes water volume per fill, lowers overall consumption per cycle and improves sustainability throughout the useful life.

Hydraulic Design

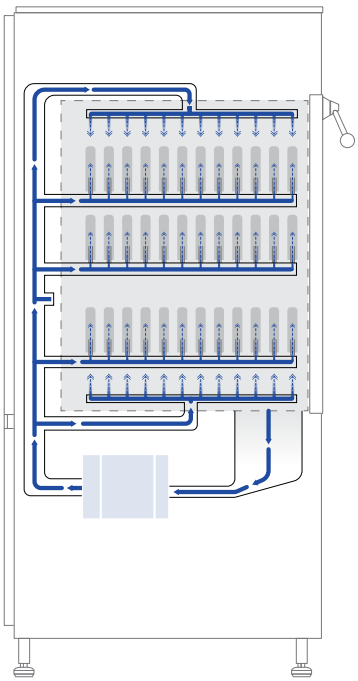

The Lancer hydraulic design optimizes pressure and flow for efficient performance at all wash levels.

The combination of a high-performance recirculation pump, straight-line fluid path and center-mounted rack interface assures maximum water flow through spray arms and injectors.

Washer pump is protected from debris by a stainless steel sump screen. The screen lifts out without tools for easy cleaning.

Model 1400 LXP, waterflow

View-In-Process

An optional dual pane View-In-Process (VIP) window includes an interior LED light for visual verification of the interior load during the cycle. The light is activated by the On/Off switch through the Prolux controller. Tempered safety glass provides excellent sound and heat abatement and enhances operator safety. Factory installed, specify when ordering.

Model 910 LX:
13.7" (348 mm) H x 6.8" (173 mm) W

Models 1300 LX / 1400 LXP / 1600 LXP:
20" (508 mm) H x 6.8" (173 mm) W

Simple, flexible, documented, **trusted.**

Prolux Controller. The all new 3.5" Prolux and 7" Prolux Plus controllers are based on a high-performance PLC microprocessor designed for simplicity, one-touch start, real-time status indicators and intuitive programming options that permit customization over the range of washer operations.

Both the Prolux and Prolux Plus controller integrate a suite of menu screens that support digital functions from cycle selection, process monitoring, warning advisories, audible and visual alarms, system communications and data capture.

Operation.

- Screen menus and graphic user interfaces are designed to simplify setup and operations, including active programs, remaining time, warnings, alarms and cycle complete notifications.
- Four preset programs are factory loaded for one-touch control of most routine applications.
- When additional cycle programs are desired, parameters can be changed through secure access to the administration screen where an intuitive graphic user interface displays all options.

Communication and Connectivity.

- A front-panel USB port simplifies direct connection to peripheral devices for cycle tracking and data capture. The port complies with international IP21 standards for ingress protection from condensation.
- A real-time process record is printed if optional printer is installed.
- Multiple data ports include Ethernet and RS422/485 connectors.
- Optional printer documents cycle performance, warnings and alarms.

The Prolux and Prolux Plus (above) controllers include a touchscreen interface with a common icon directory that permits scrolling access to primary screens from the same menu. A set of sub-menu screens display additional icon directories specific to the screen functions.

910 LX / 1300 LX

- 3.5" Prolux color touchscreen interface
- 320 x 240 pixel resolution display
- four presets
- additional custom program options

1400 LXP / 1600 LXP / 1800 LXA

- 7" Prolux Plus color touchscreen interface
- 800 x 480 pixel resolution display
- four presets
- additional custom program options

The Prolux control interface features an intuitive menu of primary and secondary screens, configured with icons, to simplify access to all functions. The touch-screen is easily managed with a gloved hand.

Programming.

Programmable cycle parameter selections include:

- Prewash. Up to 3 prewashes, 0 to 30 minutes each, temperatures up to 95°C (203°F), chemical dosing as desired.
- Wash. 0 to 30 minutes, temperatures up to 95°C (203°F), chemical dosing as desired.
- Acid rinse. 0 to 30 minutes, chemical dosing, temperatures up to 95°C (203°F).
- Running Water Rinses. One or more short rinse sequences after the wash or rinse cycle purge the hydraulic circuit of residual detergent and rinsing agents.
- Rinse, DI. Up to 4 rinses, 0 to 30 minutes each. Ambient to 95°C (203°F).
- Final Rinse, DI. 0 to 30 minutes, temperatures up to 95°C (203°F).
- Drying. Up to 90 minutes, adjustable. Temperature, ambient to 110°C (230°F), Prolux Plus models; ambient to 85°C (185°F), Prolux models.
- Cooling. 0 to 30 minutes, adjustable.

Display Screens

Featured display screens are 3.5" screen. Displays for 7" screens are identical.

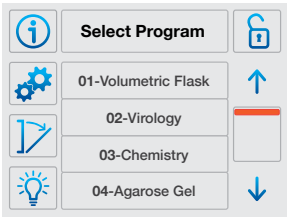

Program Selection. The Program Selection screen lists the four factory presets, as well as additional presets added through administrator access.

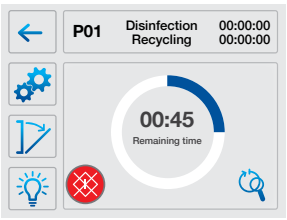

Cycle in Process. A real-time status screen displays time remaining until cycle completion and links to cycle detail screens with the touch of a button.

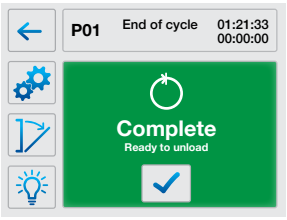

Cycle Completed. The green Cycle Completed screen confirms completion of the cycle and indicates the washer is safe to unload.

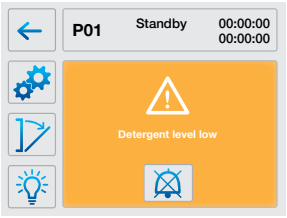

Warning Message. The amber Warning Message screen provides a status report to prompt refill of detergent and rinse agents.

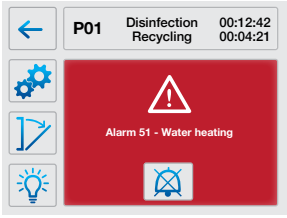

Alarm Message. The red Alarm Message screen confirms the reason for a system shutdown and prompts corrective action needed in advance of a restart.

Configurable for your facility.

Site Preparation and Utilities

Pre-Installation. Lancer start-up services by factory-authorized technicians include washer set and leveling, pre-installation and final inspections, soft hook-up to utilities (in place by customer), check-out and initial operation. Contact Lancer to arrange startup services. Validation documentation and execution options are available; contact Lancer for information. See options.

Post-Installation. Lancer offers technical support by direct product specialists between 8AM and 7PM Eastern Time EST.

Warranty Information. Lancer products are supported by a standard industry warranty.

Lancer Model	910 LX / 1300 LX / 1400 LXP / 1600 XLP / 1800 LXA
Water Supply (hot, cold and DI)	¾" hose thread connection, recommended min. flow 5.25 gpm (20 L); lower flow rates may extend cycle times; 29-87 psi water pressure
Drain Requirement, Vertical Standpipe	1 ½" (40 mm) diameter, 20" to 27" (500 to 700 mm) above floor

Certifications

UL/IEC 61010-1

Adaptable to suit your application.

Options

Features		910 LX	1300 LX	1400 LXP	1600 LXP	1800 LXA
Discharge Water Cooling	Reduces effluent temperature to less than 60°C (140°F) for code compliant transfer to utility drain.	☐	☐	☐	☐	☐
pH Programming	Neutralizes effluent before transfer to utility drain.	☐	☐	☐	☐	☐
Printer	For hard copy permanent record.	☐	☐	☐	☐	☐
Emergency Stop	Emergency stop button.	☐	☐	☐	☐	■
Sampling Valve	Manual sampling valve.	☐	☐	☐	☐	☐
Conductivity Verification	Conductivity meter for final rinse verification.	☐	☐	☐	☐	☐
Final Rinse Kit	Final Rinse kit for conductivity monitoring inclusive of chemical isolation valves, recirculation pump case drain and Pneumatic drain valve for quick evacuation of chamber. Requires compressed air and floor drain.	—	—	☐	☐	☐
Water Softener	Water softener.	■	☐	☐	☐	☐
Chemical Dosing Pump, Additional	Additional chemical dosing pump. Up to 1 additional on 910 LX / 1300 LX and up to 3 additional on 1400 LXP / 1600 LXP/ 1800 LXA.	☐	☐	☐	☐	☐
Main Switch	Main power switch, shuts off all power to the washer.	—	—	☐	☐	☐

■ / ☐ Standard / Optional Features

See product specifications for details and additional options to select.

Utilities		910 LX	1300 LX	1400 LXP	1600 LXP	1800 LXA
Steam Heating	Steam coil to utilize house steam for heating of wash/rinse water.	—	☐	☐	☐	☐
Low Pressure Kit	Boosts DI water supply input pressure to assure optimum performance.	☐	☐	☐	☐	☐
Steam Condenser	Steam condenser for collapsing exhaust vapor.	☐	☐	☐	☐	☐
Gravity Drain	For quick evacuation of chamber. Requires compressed air and floor drain.	☐	☐	☐	☐	☐
Tri-clamp DI Inlet	Direct DI water inlet with tri-clamp connection and dry contact for control of customer DI loop valve.	☐	☐	☐	☐	☐

Construction		910 LX	1300 LX	1400 LXP	1600 LXP	1800 LXA
Trim Kit	Stainless steel trim kit for recessed installation.	☐	☐	☐	☐	☐
Moving Runners	Customized location of rack manifolds to accommodate specific loads.	☐	☐	☐	☐	☐
Chamber Height Extension	Chamber elevation extension; additional 250 mm (includes door jacks).	—	—	—	☐	—
Extended Diptube Kit	Extended diptubes for use with 33-55 gallon chemical containers.	☐	☐	☐	☐	☐
Dry Contact	Dry contact for DI control.	☐	☐	☐	☐	☐
Seismic Restraints	Seismic tie down brackets.	☐	☐	☐	☐	☐
Stainless Steel Plumbing	Complete stainless steel hydraulic circuit.	—	—	☐	☐	☐
View-In-Process Window	Includes interior light, permitting visual verification during wash cycles.	☐	☐	☐	☐	☐

■ / ☐ Standard / Optional Features

See product specifications for details and additional options to select.

Common **Accessories.**

Choose from up to 60 different injector racks, pipette racks and baskets. All racks are interchangeable between the washer lower and upper levels.

- A wide variety of standard inventory baskets and injector racks are available to meet most needs.
- Custom racks and baskets can be fabricated to meet specific needs or special applications.

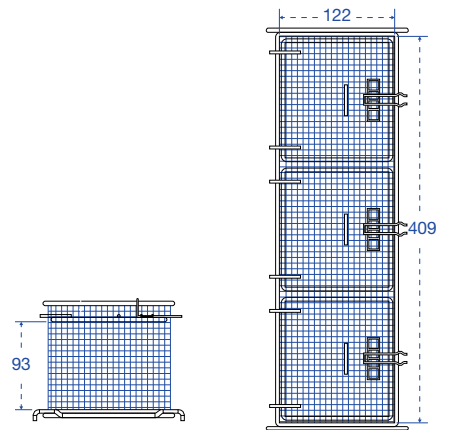

Small mesh basket with cover, long:
Catalog No. STCXL

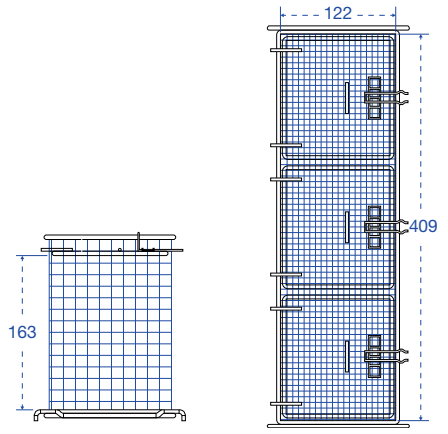

Small mesh basket, tall with cover, long:
Catalog No. LTCXL

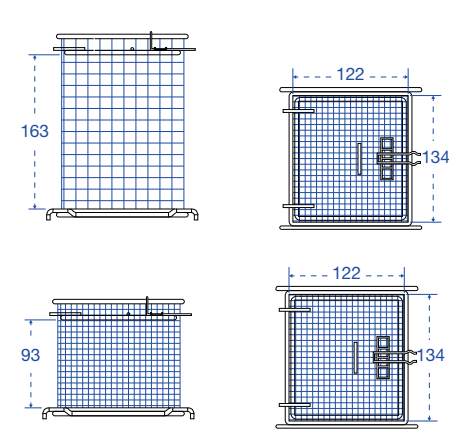

Small mesh baskets, tall and short:
Catalog No. LTC and STC

Small Mesh Baskets

For bottle caps, ferrules, plugs, stoppers and test tubes.

	910 LX / 1300 LX / 1400 LXP / 1600 LXP / 1800 LXA
Mesh basket, short, with cover, 122 x 134 x 93 mm	STC
Mesh basket, short, with cover, 122 x 409 x 93 mm	STCXL
Mesh basket, tall, with cover, 122 x 134 x 163 mm	LTC
Mesh basket, tall, with cover, 122 x 409 x 163 mm	LTCXL

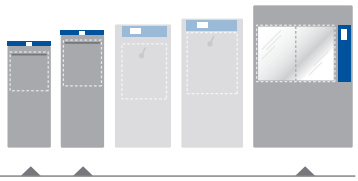

Accessories. 910 LX / 1300 LX / 1800 LXA

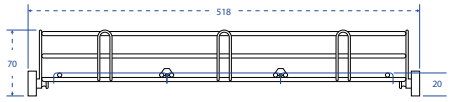

Basic Basket with reversible tray lid: Catalog No. PST and GC

Basic basket with spray arm: Catalog No. PSBT

Basket for culture dishes: Catalog No. BP

Baskets

Useful for beakers, trays, dishes, dissolution vessels, funnels, instruments and jars.

	910 LX / 1300 LX / 1800 LXA
Basic basket	PST
Basic basket with spray arm	PSBT
Basket, half with spray arm	PSBT 1/2
Basket, for culture dishes	BP

Basket Covers

Accessory basket covers are available to secure small or lightweight labware during the wash cycle.

	910 LX / 1300 LX / 1800 LXA
Reversible tray lid for PST/PSBT	GC
Reversible tray lid, half size for PST/PSBT	GC1/2
Reversible tray lid, one-third size for PST/PSBT	GC1/3

Short Injectors, 3" (76 mm) tall

For inside out cleaning of narrow neck glassware, bottles, cylinders, boiling flasks, Erlenmeyer flasks and volumetric flasks.

	910 LX / 1300 LX / 1800 LXA
Half rack, 27 short jets, 6 mm diameter	27 IXC 1/2
36 short jets, 6 mm diameter	36 IXC
41 short jets, 6 mm BOD rack	41 IXC
48 short jets, 2 mm diameter	48 IXA
48 short jets, 6 mm diameter	48 IXC
64 short jets, 2 mm diameter	64 IXA
64 short jets, 6 mm diameter	64 IXC
64 short jets, mixed 2 mm and 6 mm diameter	64 IXA/2
100 short jets, 2 mm diameter	100 IXA
100 short jets, 6 mm diameter	100 IXC
100 short jets, mixed 2 mm and 6 mm diameter	100 IXA/2

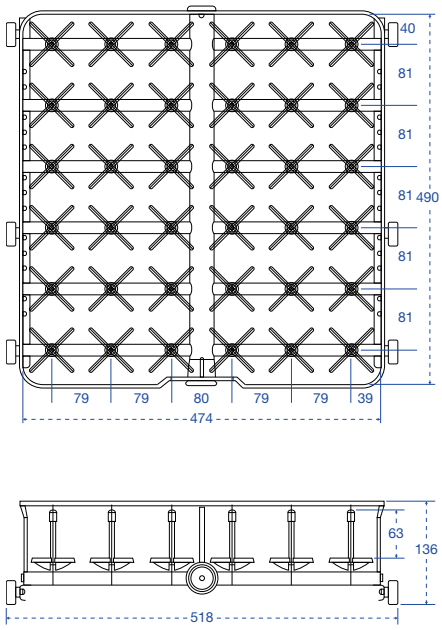

Catalog No. 36 IXC

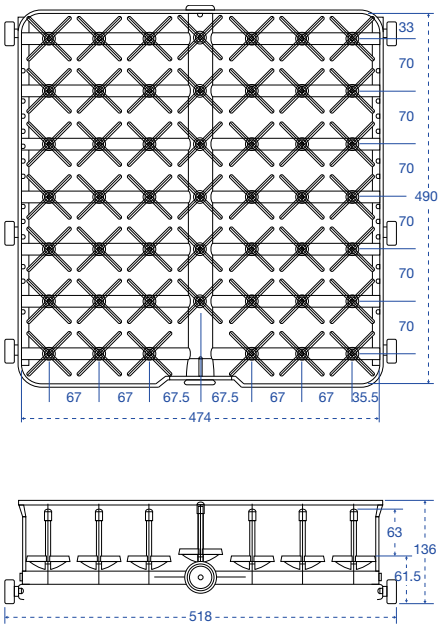

Catalog No. 48 IXC; IXA

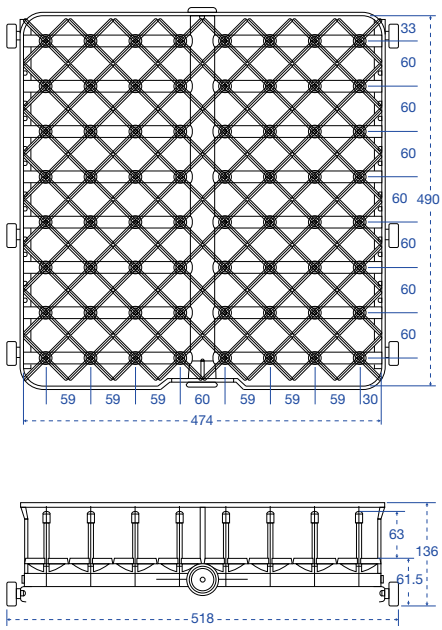

Catalog No. 64 IXA; IXC; IXA/2

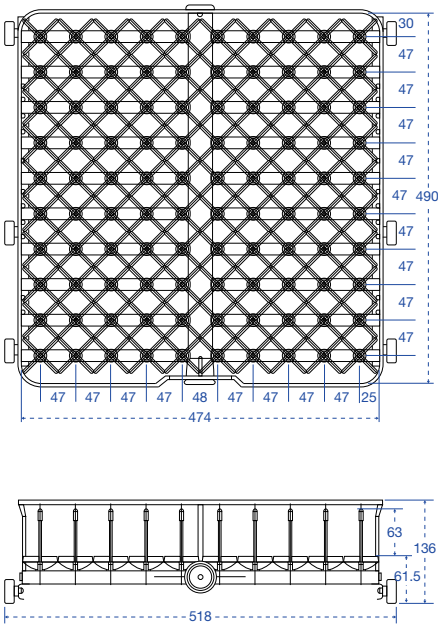

Catalog No. 100 IXA; IXC; IXA/2

IXC: Injector rack, short injectors, 3" (76 mm) tall, jets 6 mm diameter

IXA: Injector rack, short injectors, 3" (76 mm) tall, jets 2 mm diameter

Long Injectors, 6" (152 mm) tall

For inside out cleaning of large narrow neck glassware, bottles, cylinders, boiling flasks, Erlenmeyer flasks and volumetric flasks.

	910 LX / 1300 LX / 1800 LXA
5 long jets, 12.7 mm diameter, with spray ball	5 IXL
9 long jets, 12.7 mm diameter	9 IXL
12 long jets, 6 mm diameter	12 IXL
20 long jets, 8 mm diameter	20 IXL
36 long jets, 6 mm diameter	36 IXL
48 long jets, 6 mm diameter	48 IXL
64 long jets, 6 mm diameter	64 IXL
100 long jets, 6 mm diameter	100 IXL

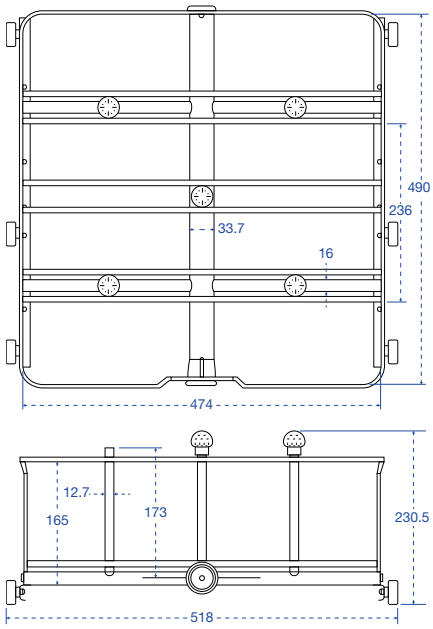

Catalog No. 5 IXL

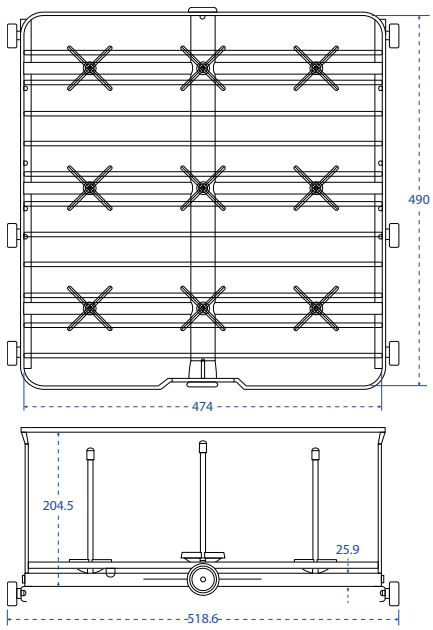

Catalog No. 9 IXL

Adjustable clip positions labware on injector to protect labware from breakage.

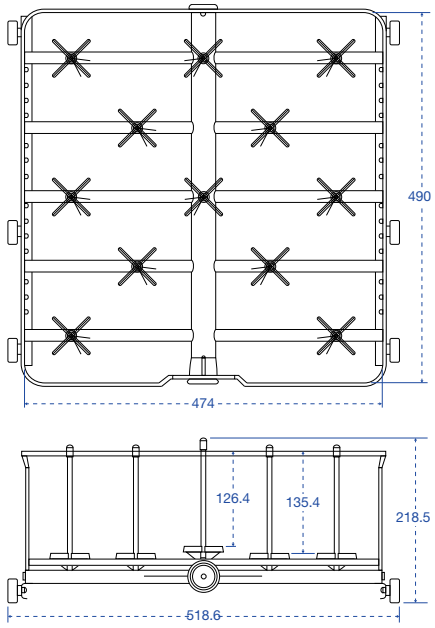

Catalog No. 12 IXL

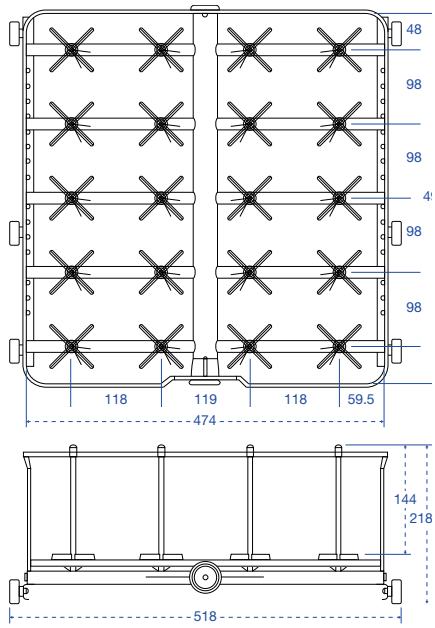

Catalog No. 20 IXL

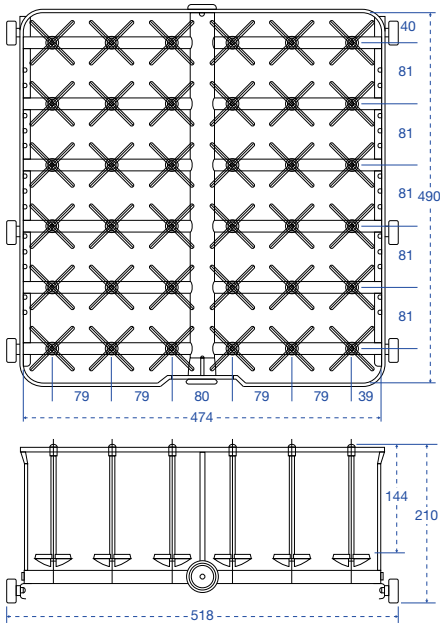

Catalog No. 36 IXL

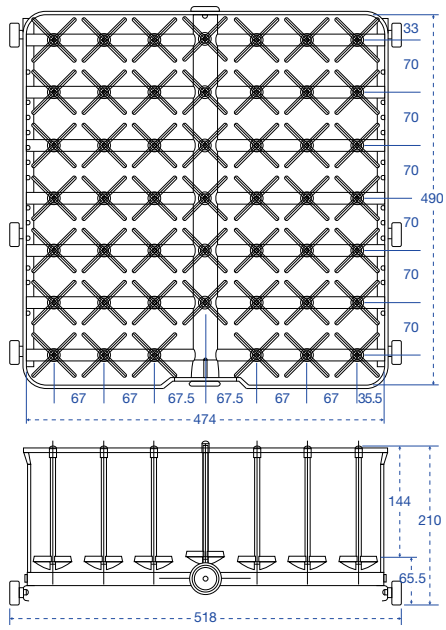

Catalog No. 48 IXL

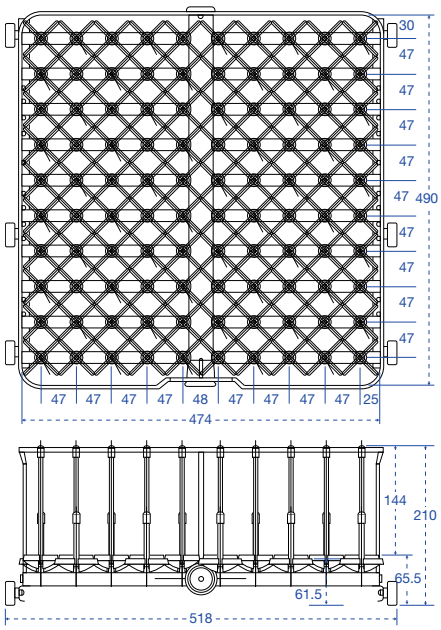

Catalog No. 64 IXL

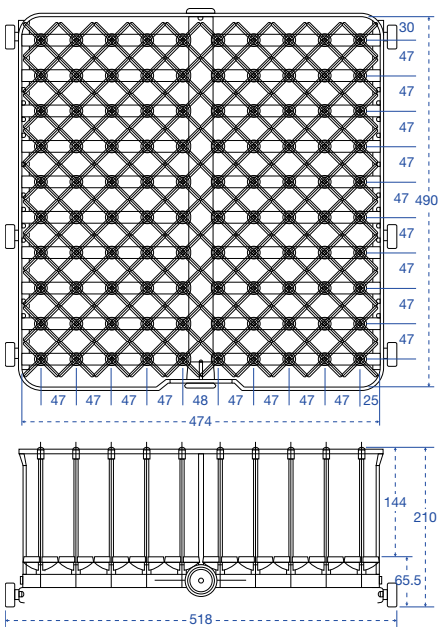

Catalog No. 100 IXL

Injector Rack Covers

Injector rack covers are available to secure small or lightweight labware during the wash cycle.

	910 LX / 1300 LX / 1800 LXA
Full-size	GCI
Half-size	GCI 1/2
Third-size	GCI 1/3

Extra Long Injectors, 12" (305 mm) tall

For inside out cleaning of narrow neck glassware, bottles, cylinders, boiling flasks, Erlenmeyer flasks and large volumetric flasks.

	910 LX / 1300 LX / 1800 LXA
1 long jet, 12.7 mm diameter, with spray ball	1 IXL
2 long jets, 12.7 mm diameter, with spray ball	2 IXL
4 long jets, 12.7 mm diameter, with spray ball	4 IXL

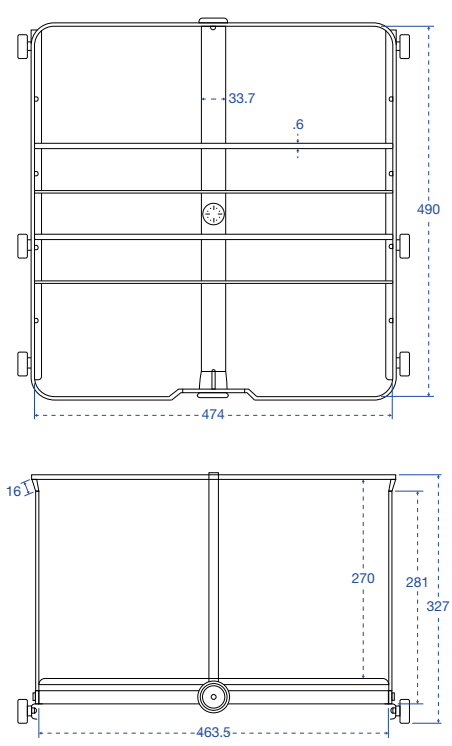

Catalog No. 1 IXL

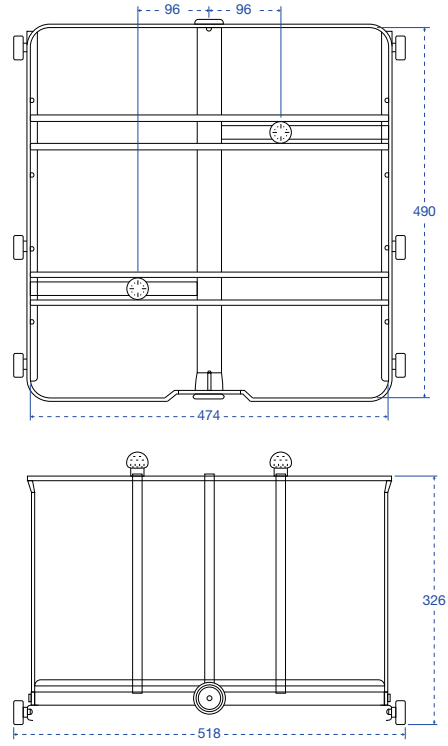

Catalog No. 2 IXL

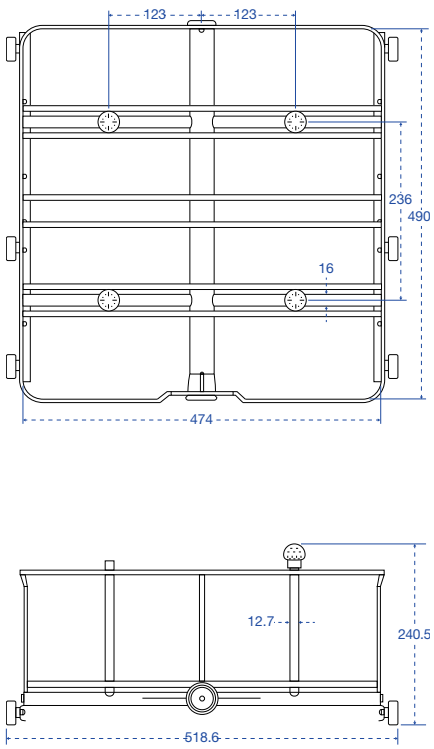

Catalog No. 4 IXL

Combination Short/Long Injectors

For inside out cleaning of mixed loads of narrow neck glassware, bottles, cylinders, boiling flasks, Erlenmeyer flasks and volumetric flasks.

	910 LX / 1300 LX / 1800 LXA
36 short and long jets, 6 mm diameter	36 IXLC
48 short and long jets, 6 mm diameter	48 IXLC
48 short and long jets, 6 mm diameter, 2 rows 2 mm diameter	48 IXLCA
64 short and long jets, 6 mm diameter	64 IXLC
100 short and long jets, 6 mm diameter	100 IXLC

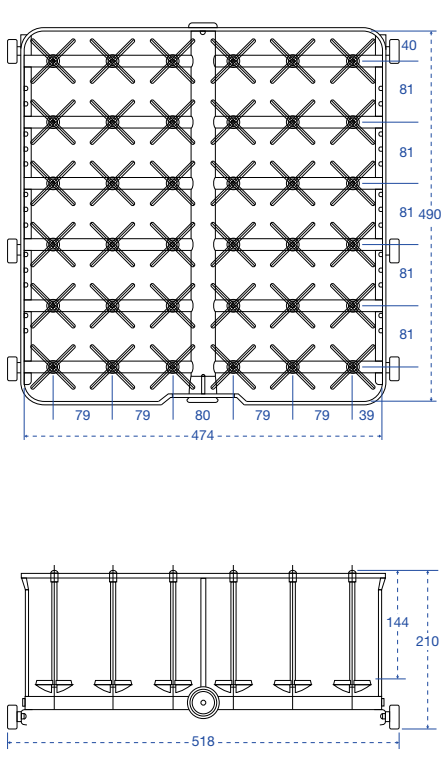

Catalog No. 36 IXLC

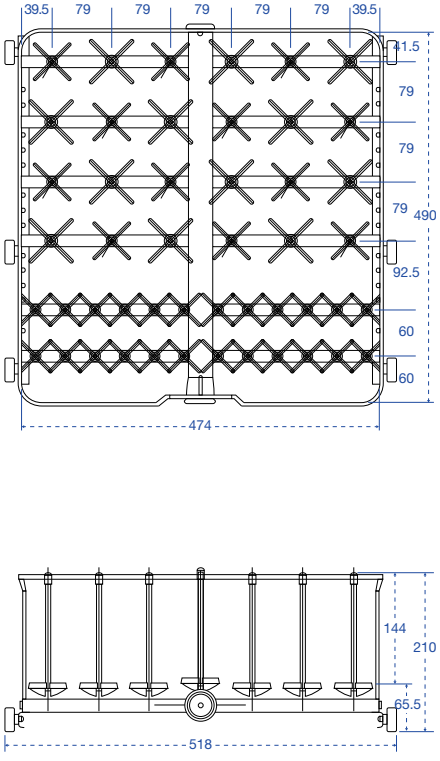

Catalog No. 48 IXLC; IXCLA

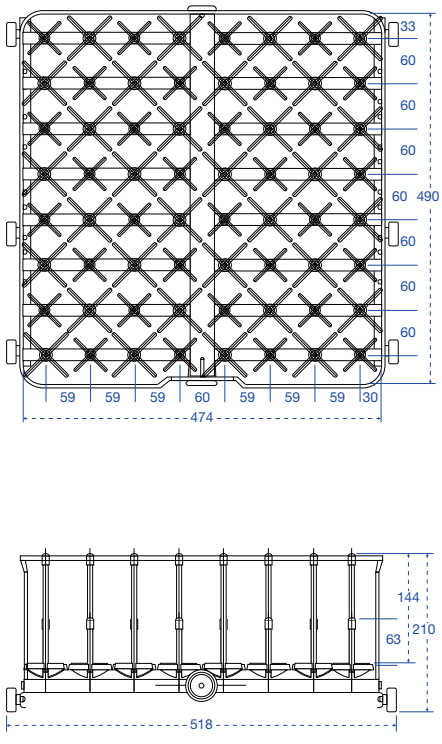

Catalog No. 64 IXLC

Multipurpose Racks

For a combination of labware and pipettes.

	910 LX / 1300 LX / 1800 LXA
Basic basket plus 27 short and long jets	PS/27 IXLC
25 pipettes, angled plus 24 short and long jets	25 PIP/24 IXLC
50 pipettes, angled plus 34 short and long jets	50 PIP/34 IXLC
PST plus 14 short jets plus 4 long injectors, angled and perforated	4 EP/14 IXC/PS
28 short and long jets plus 4 long injectors, angled and perforated	4 EP/28 IXLC
One third PS plus 21 short and long jets, plus 25 pipettes	PS/21 IXLC/25PIP

Pipette Racks

Accessory pipette racks are configured to accommodate reusable pipettes.

	910 LX / 1300 LX / 1800 LXA
Grommet style, individually loaded, 100 position	100 PIP

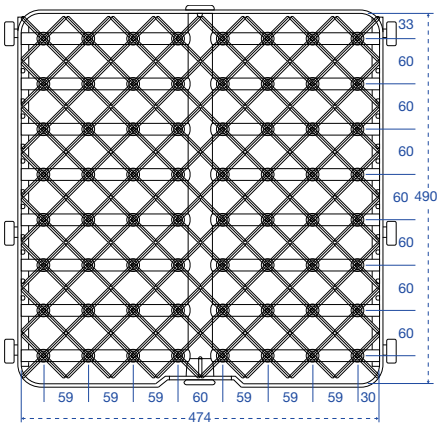

Catalog No. 100 IXLC

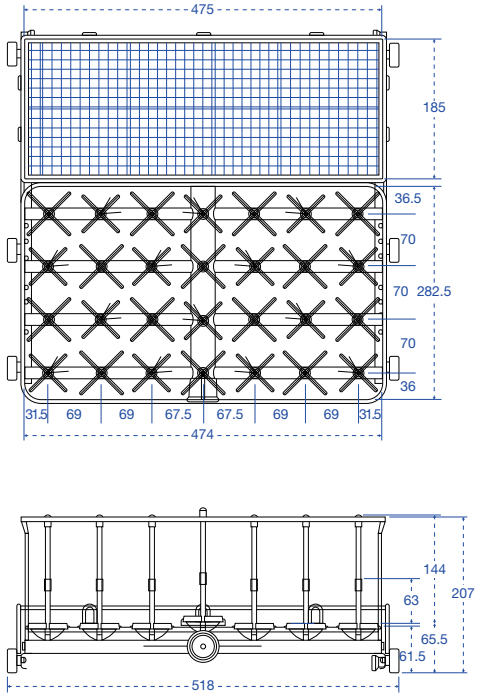

Catalog No. PS/27/IXLC

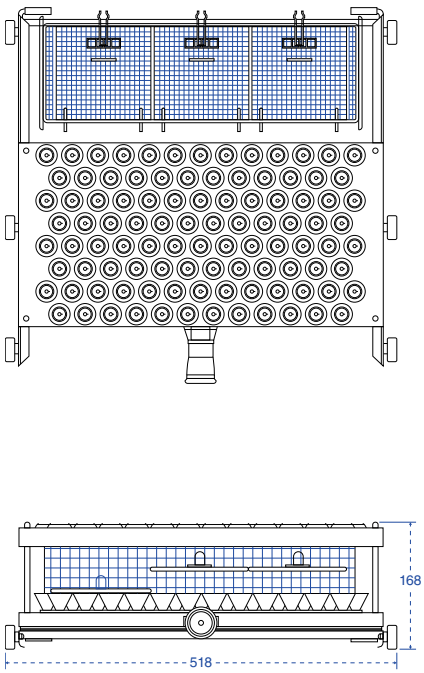

Catalog No. 100 PIP

Storage Stand

An accessory storage stand offers a convenient place to store accessory racks and baskets when not in use.

	910 LX / 1300 LX / 1800 LXA
Holds up to 5 racks	RP

Supports

Stainless steel. Fits inside open basket to permit placement of load at an angle.

	910 LX / 1300 LX / 1800 LXA
Standard support, short, 3 1/2" (85 mm)	SSC
Standard support, short, 1/3 PST Surface	SSC 1/3 PS
Standard support, tall, 6" (150 mm)	SSL
Standard support, tall, 1/3 PST Surface	SSL 1/3 PS

Trolley

The stainless steel loading trolley transfers the load and mates with the washer to simplify loading and unloading. The trolley includes a retainer lip to keep the floor dry from residual water. Includes locking casters.

	910 LX	1300 LX	1800 LXA
Loading trolley	TN 910 LX	TN 13	—
Loading table	—	—	TC 1800

Accessories. 1400 LXP

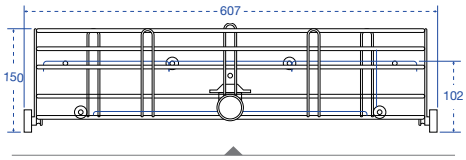

Basic Basket with reversible tray lid: Catalog No. PST and GC

Basic basket with spray arm: Catalog No. PSBT

Baskets

Useful for beakers, trays, dishes, dissolution vessels, funnels, instruments and jars.

	1400 LXP
Basic basket	PST 14
Basic basket with spray arm	PSBT 14
Basket, half with spray arm	PSBT 1/2 14

Basket Covers

Accessory basket covers are available to secure small or lightweight labware during the wash cycle.

	1400 LXP
Reversible tray lid for PST/PSBT	GC 14
Reversible tray lid, half size for PST/PSBT	GC 1/2 14

Short Injectors, 3" (76 mm) tall

For inside out cleaning of narrow neck glassware, bottles, cylinders, boiling flasks, Erlenmeyer flasks and volumetric flasks.

	1400 LXP
48 short jets, 6 mm diameter	48 IXC 14
64 short jets, 6 mm diameter	64 IXC 14
64 short jets, mixed 2 mm and 6 mm diameter	64 IXA/2 14
81 short jets, 2 mm diameter	81 IXA 14
81 short jets, 6 mm diameter	81 IXC 14
81 short jets, mixed 2 mm and 6 mm diameter	81 IXA/2 14
100 short jets, 2 mm diameter	100 IXA 14
100 short jets, 6 mm diameter	100 IXC 14
100 short jets, mixed 2 mm and 6 mm diameter	100 IXA/2 14

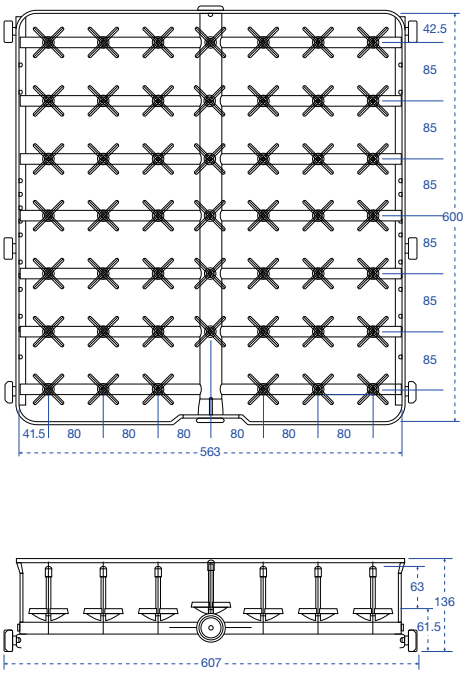

Catalog No. 48 IXC 14

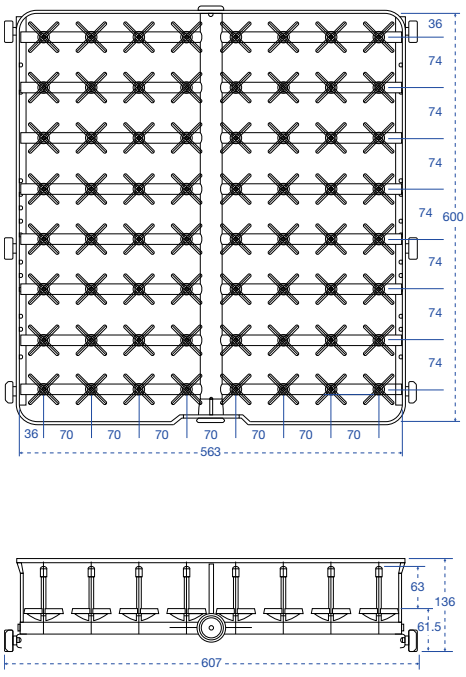

Catalog No. 64 IXC; IXA/2 14

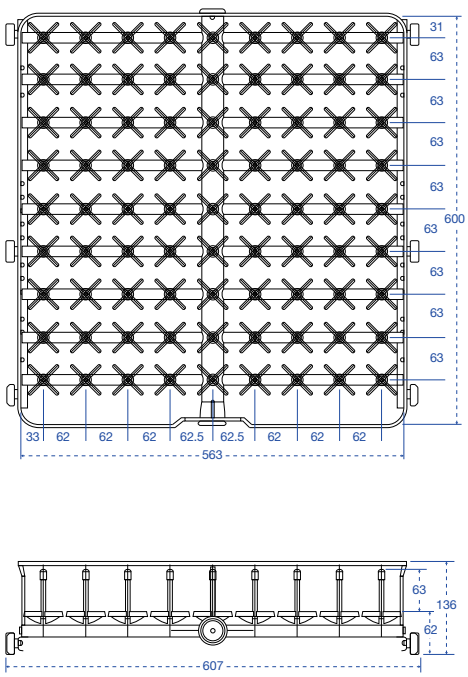

Catalog No. 81 IXA; IXC; IXA/2 14

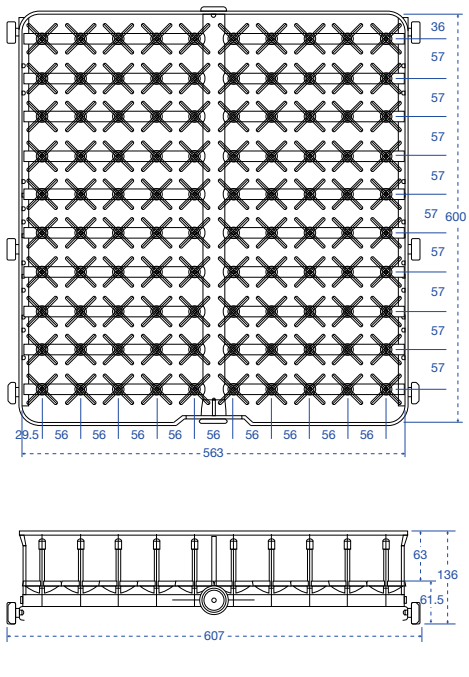

Catalog No. 100 IXA; IXC; IXA/2 14

Long Injectors, 6" (152 mm) tall

For inside out cleaning of large narrow neck glassware, bottles, cylinders, boiling flasks, Erlenmeyer flasks and volumetric flasks.

	1400 LXP
9 long jets, 12.7 mm diameter	9 IXL 14
12 long jets, 6 mm diameter	12 IXL 14
24 long jets, 6 mm diameter	24 IXL 14
36 long jets, 6 mm diameter	36 IXL 14
48 long jets, 6 mm diameter	48 IXL 14
64 long jets, 6 mm diameter	64 IXL 14

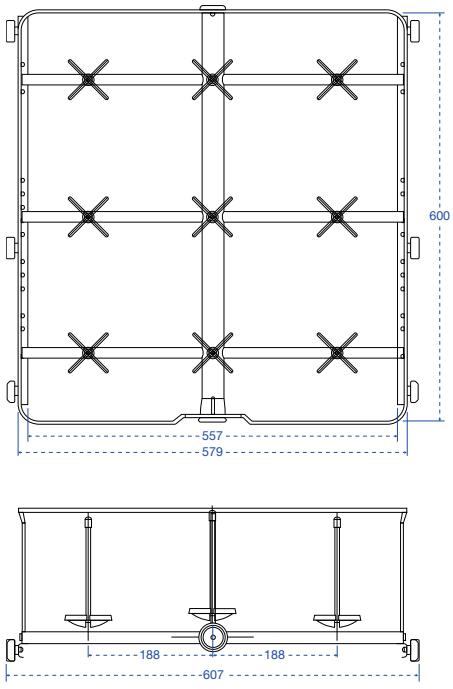

Catalog No. 9 IXL 14

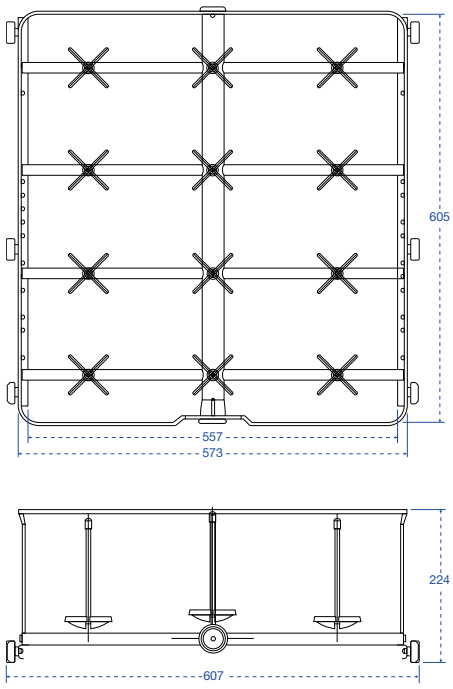

Catalog No. 12 IXL 14

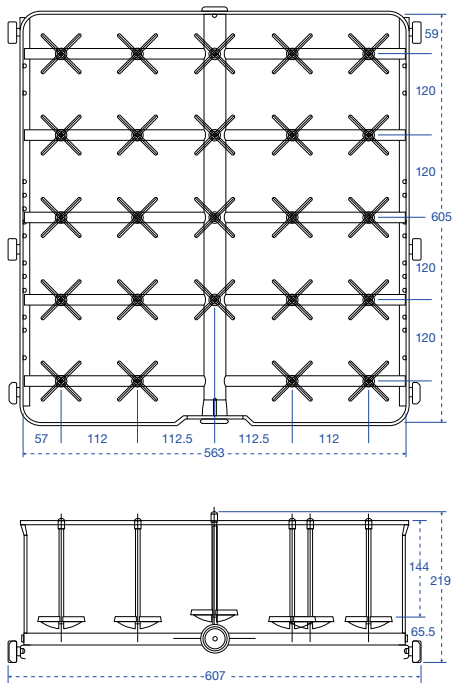

Catalog No. 24 IXL 14

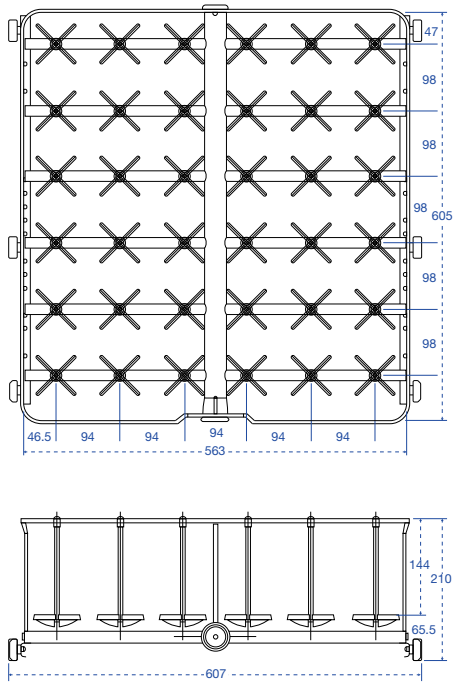

Catalog No. 36 IXL 14

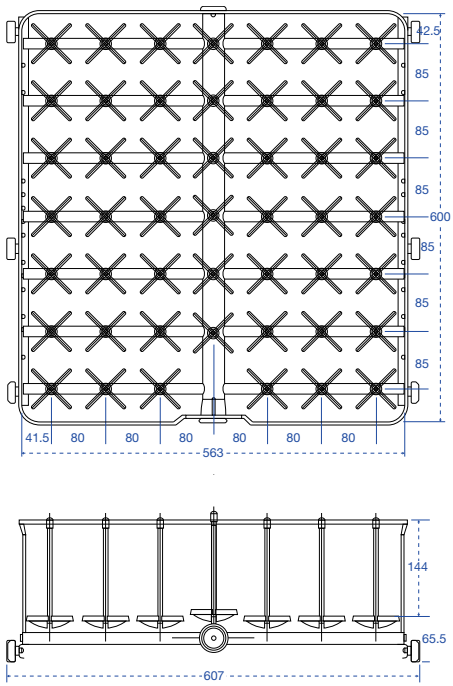

Catalog No. 48 IXL 14

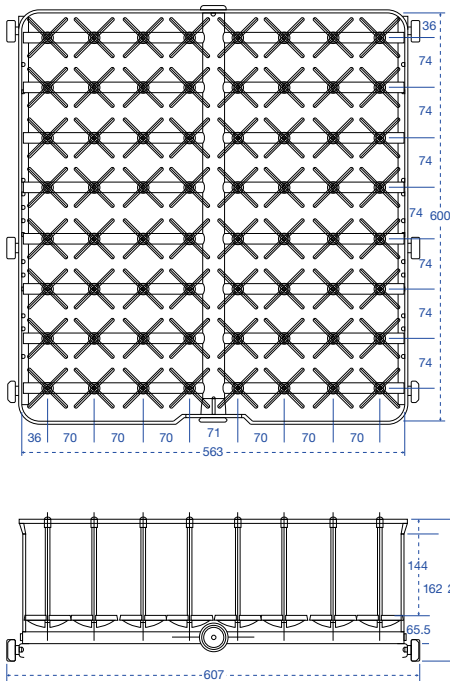

Catalog No. 64 IXL 14

Injector Rack Covers

Injector rack covers are available to secure small or lightweight labware during the wash cycle.

	1400 LXP
Full-size	GCI 14
Half-size	GCI 1/2 14

Extra Long Injectors, 12" (305 mm) tall

For inside out cleaning of narrow neck glassware, bottles, cylinders, boiling flasks, Erlenmeyer flasks and large volumetric flasks.

	1400 LXP
1 long jet, 12.7 mm diameter, with spray ball	1 IXL 14
2 long jets, 12.7 mm diameter, with spray ball	2 IXL 14
4 long jets, 12.7 mm diameter, with spray ball	4 IXL 14

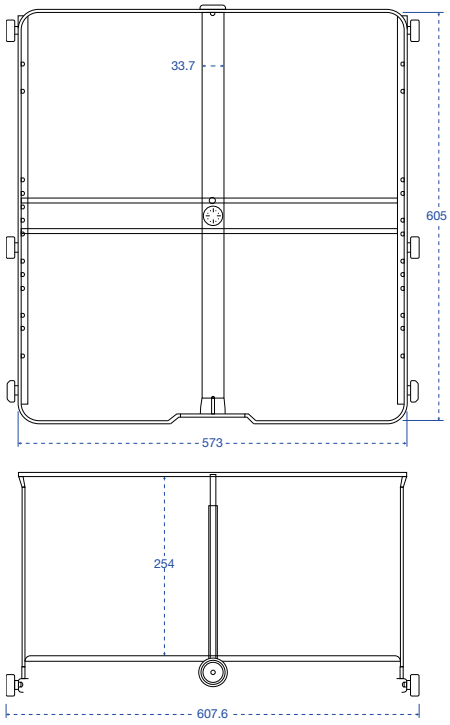

Catalog No. 1 IXL 14

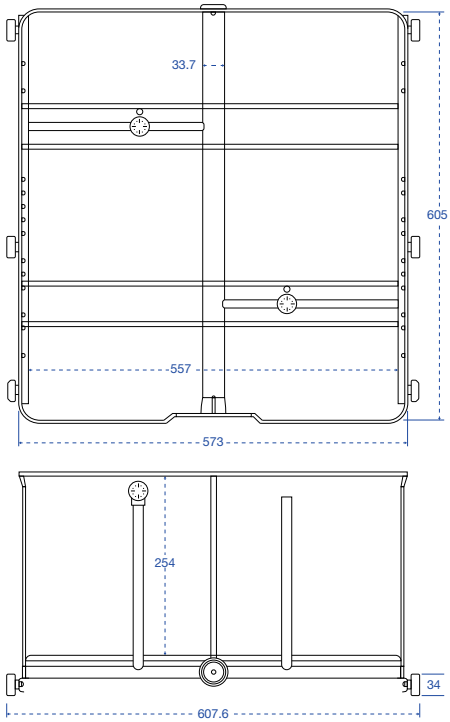

Catalog No. 2 IXL 14

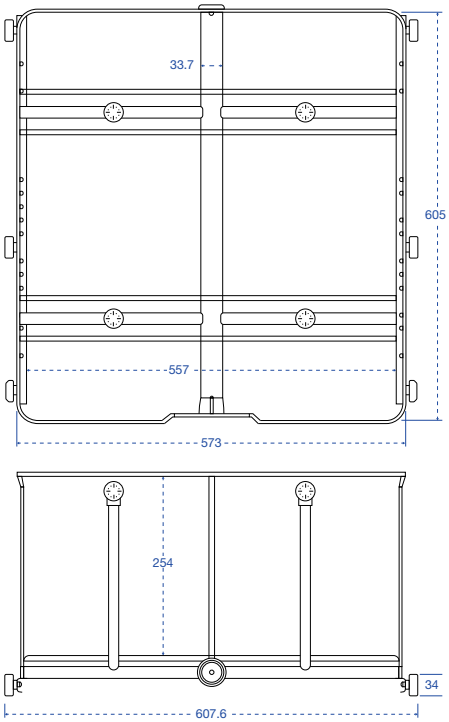

Catalog No. 4 IXL 14

Combination Short/Long Injectors

For inside out cleaning of mixed loads of narrow neck glassware, bottles, cylinders, boiling flasks, Erlenmeyer flasks and volumetric flasks.

	1400 LXP
36 short and long jets, 6 mm diameter	36 IXLC 14
48 short and long jets, 6 mm diameter	48 IXLC 14
64 short and long jets, 6 mm diameter	64 IXLC 14
81 short and long jets, 6 mm diameter	81 IXLC 14

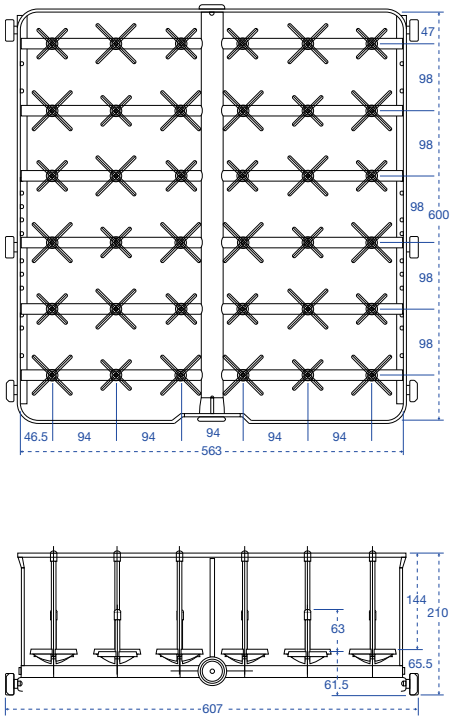

Catalog No. 36 IXLC 14

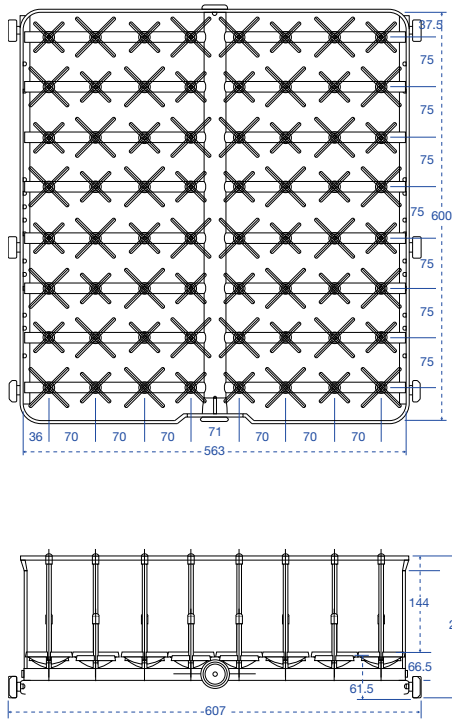

Catalog No. 48 IXLC 14

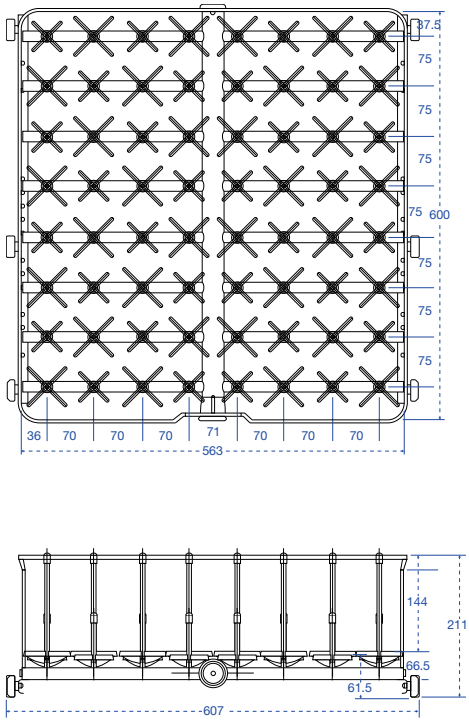

Catalog No. 64 IXLC 14

Multipurpose Racks

For a combination of labware and pipettes.

	1400 LXP
Basic basket plus 32 short and long jets	PS/32 IXLC 14
31 pipettes, angled plus 25 short and long jets	31 PIP/25 IXLC 14
24 short and long jets plus 4 long injectors, angled and perforated	4 EP/24 IXLC 14

Pipette Racks

Accessory pipette racks are configured to accommodate reusable pipettes.

	1400 LXP
Grommet style, individually loaded, 124 position	124 PIP 14
Pipette rack, canisters (4)	PPI 4B 14

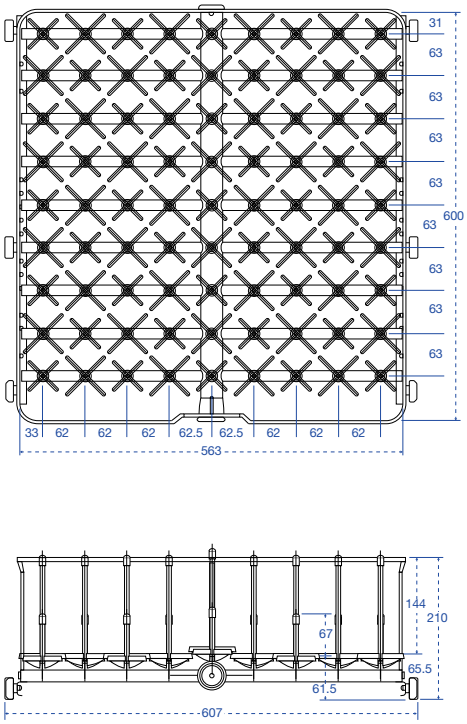

Catalog No. 81 IXLC 14

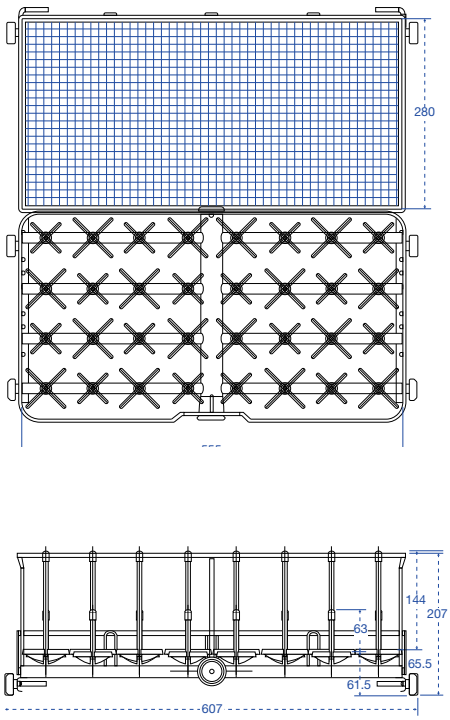

Catalog No. PS/32 IXLC 14

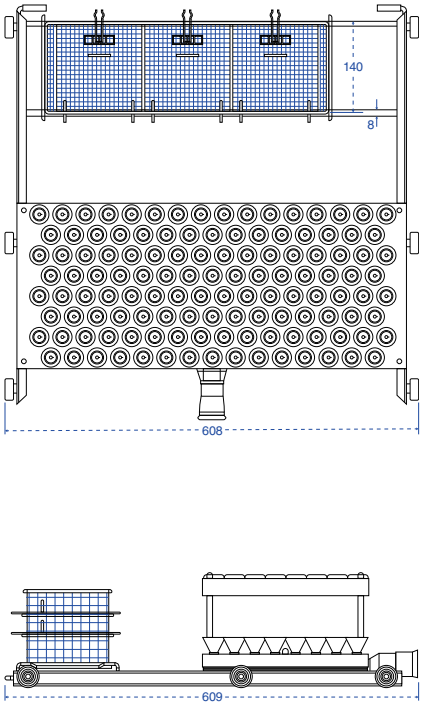

Catalog No. 124 PIP 14

Storage Stand

An accessory storage stand offers a convenient place to store accessory racks and baskets when not in use.

	1400 LXP
Holds up to 5 racks	RP 14

Trolley

The stainless steel loading trolley transfers the load and mates with the washer to simplify loading and unloading. The trolley includes a retainer lip to keep the floor dry from residual water. Includes locking casters.

	1400 LXP
Trolley, 3 levels	TN 14

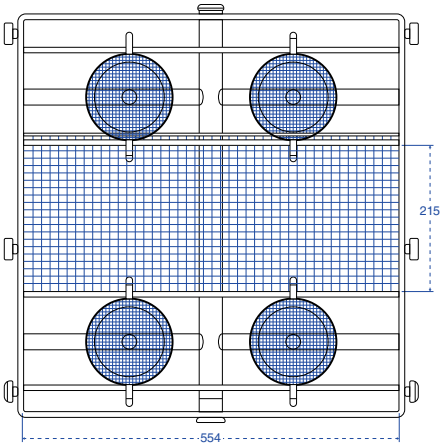

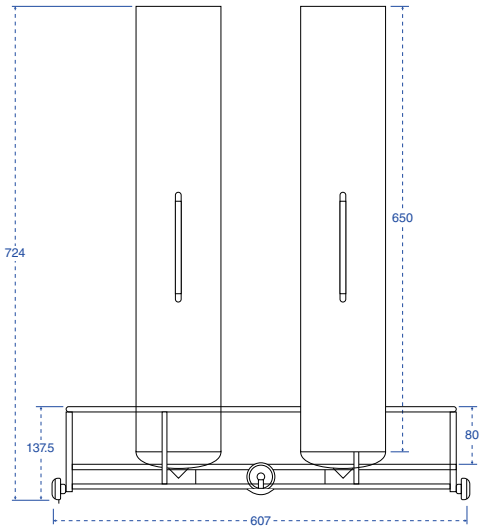

Catalog No. PPI 4B 14

Accessories. 1600 LXP

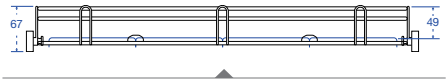

Basic Basket with reversible tray lid: Catalog No. PST and GC

Basic basket with spray arm: Catalog No. PSBT

Baskets

Useful for beakers, trays, dishes, dissolution vessels, funnels, instruments and jars.

	1600 LXP
Basic basket	PST 16
Basic basket with spray arm	PSBT 16

Basket Covers

Accessory basket covers are available to secure small or lightweight labware during the wash cycle.

	1600 LXP
Reversible tray lid for PST/PSBT	GC 16

Short Injectors, 3" (76 mm) tall

For inside out cleaning of narrow neck glassware, bottles, cylinders, boiling flasks, Erlenmeyer flasks and volumetric flasks.

	1600 LXP
36 short jets, 6 mm diameter	36 IXC 16
64 short jets, 6 mm diameter	64 IXC 16
80 short jets, 6 mm diameter	80 IXC 16
100 short jets, 2 mm diameter	100 IXA 16
100 short jets, 6 mm diameter	100 IXC 16
100 short jets, mixed 2 mm and 6 mm diameter	100 IXA/2 16
144 short jets, 2 mm diameter	144 IXA 16
144 short jets, 6 mm diameter	144 IXC 16
144 short jets, mixed 2 mm and 6 mm diameter	144 IXA/2 16

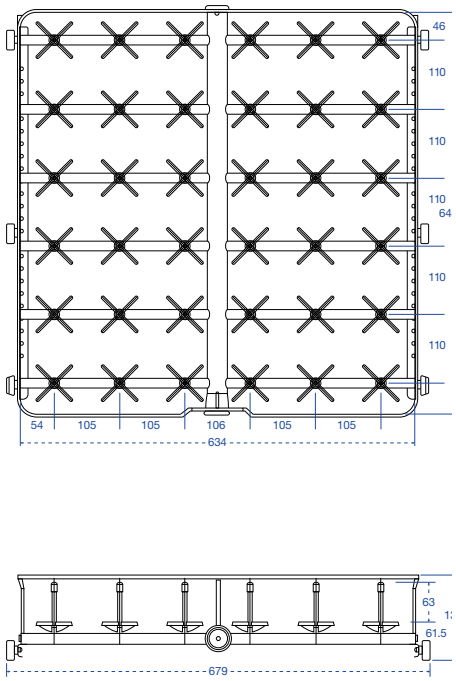

Catalog No. 36 IXC 16

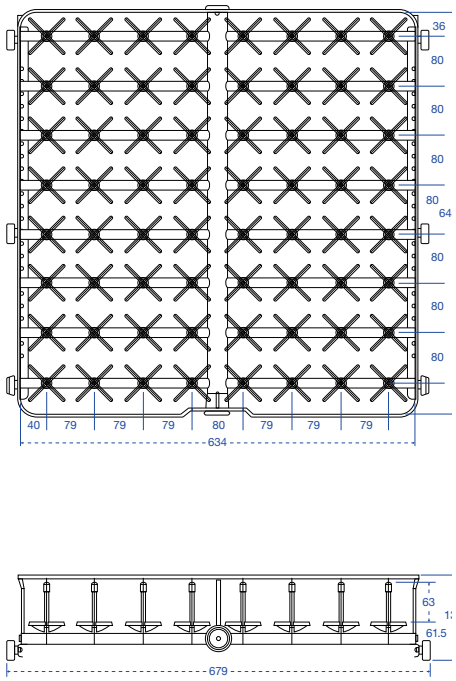

Catalog No.64 IXC 16

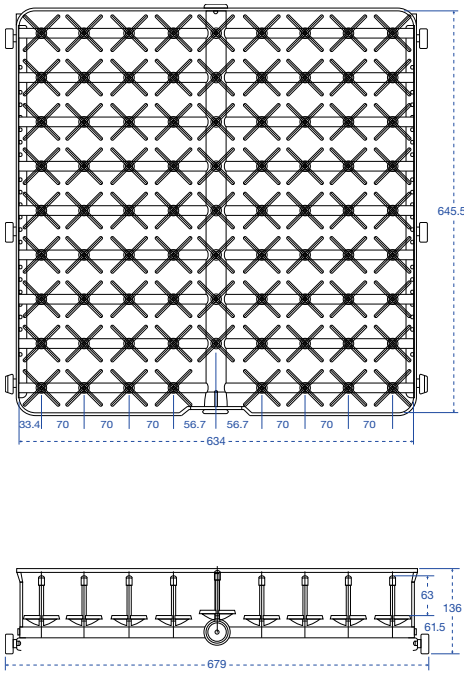

Catalog No.80 IXC 16

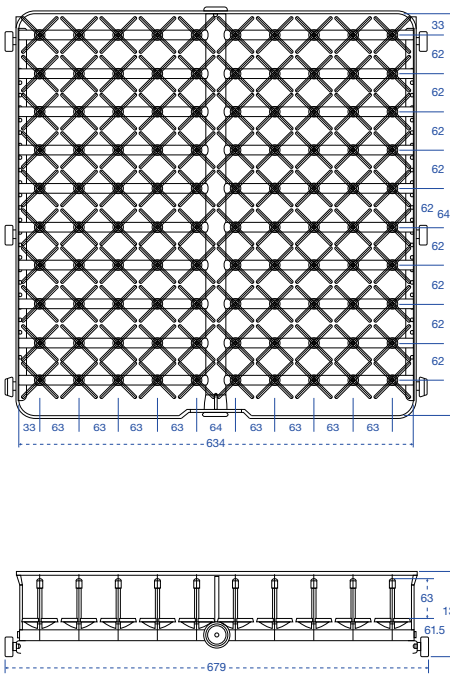

Catalog No. 100 IXA; IXC; IXA/2 16

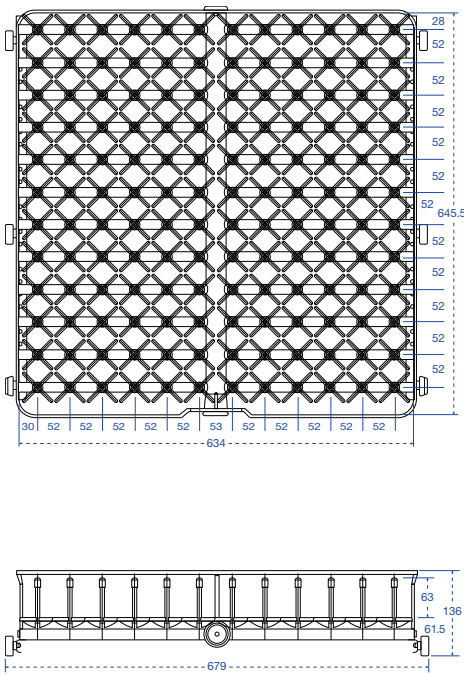

Catalog No. 144 IXA; IXC; IXA/2 16

Long Injectors, 6" (152 mm) tall

For inside out cleaning of large narrow neck glassware, bottles, cylinders, boiling flasks, Erlenmeyer flasks and volumetric flasks.

	1600 LXP
5 long jets, 12.7 mm diameter, with spray ball	5 IXL 16
9 long jets, 12.7 mm diameter	9 IXL 16
12 long jets, 6 mm diameter	12 IXL 16
36 long jets, 6 mm diameter	36 IXL 16 D6
36 long jets, 8 mm diameter	36 IXL 16
64 long jets, 6 mm diameter	64 IXL 16
80 long jets, 6 mm diameter	80 IXL 16
100 long jets, 6 mm diameter	100 IXL 16

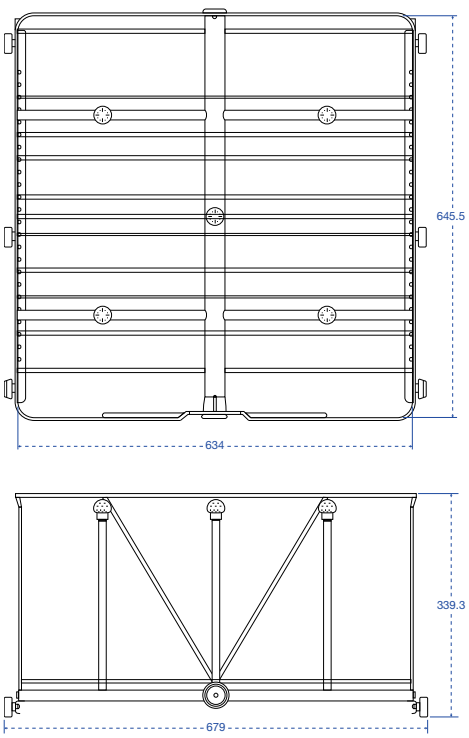

Catalog No. 5 IXL 16

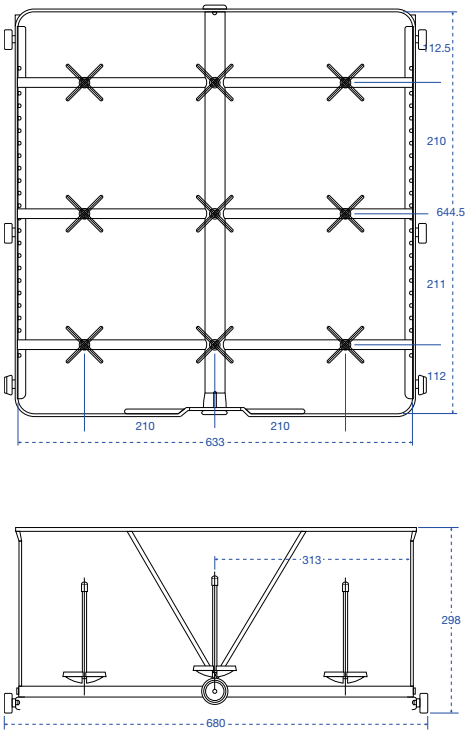

Catalog No. 9 IXL 16

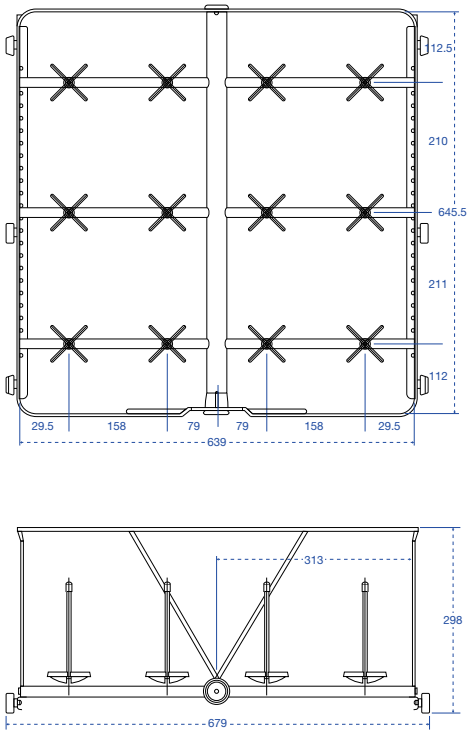

Catalog No. 12 IXL 16

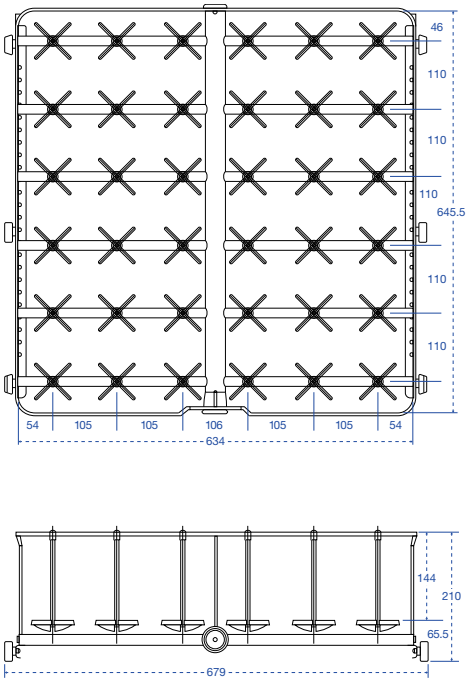

Catalog No. 36 IXL 16 D6

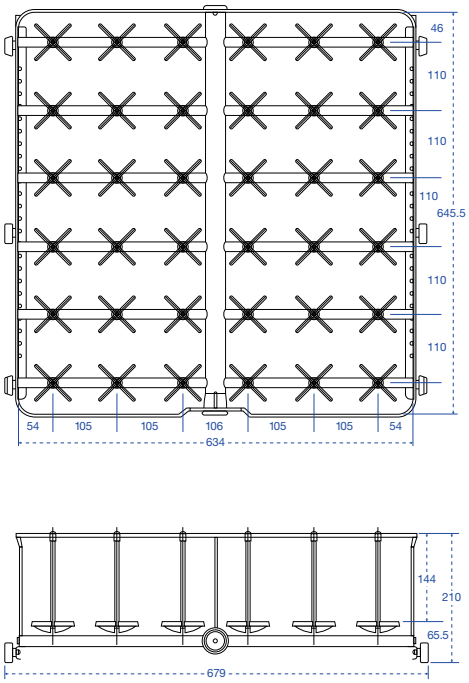

Catalog No. 36 IXL 16

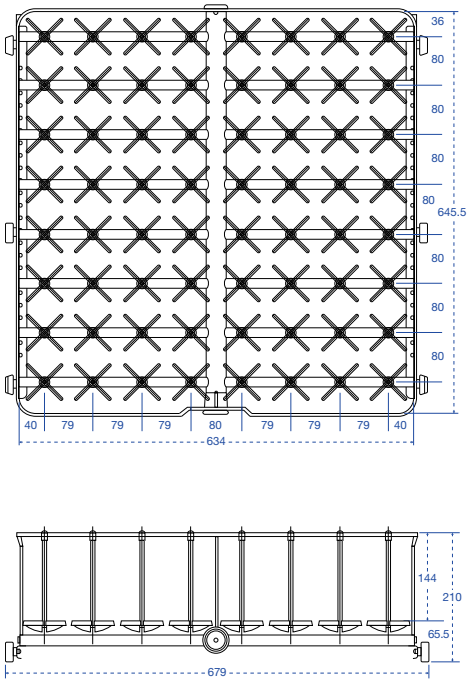

Catalog No. 64 IXL 16

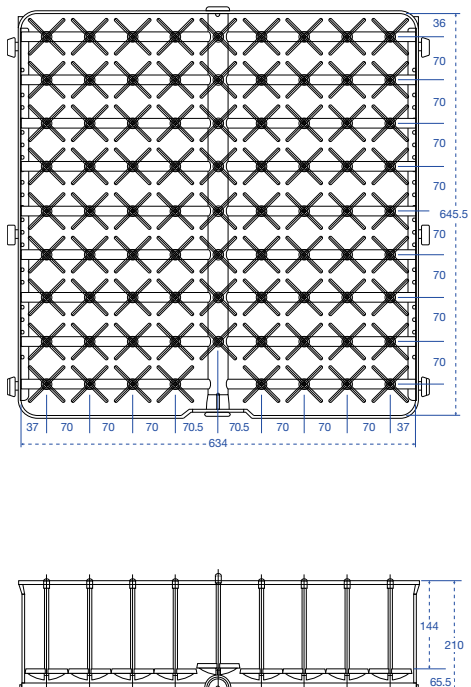

Catalog No. 80 IXL 16

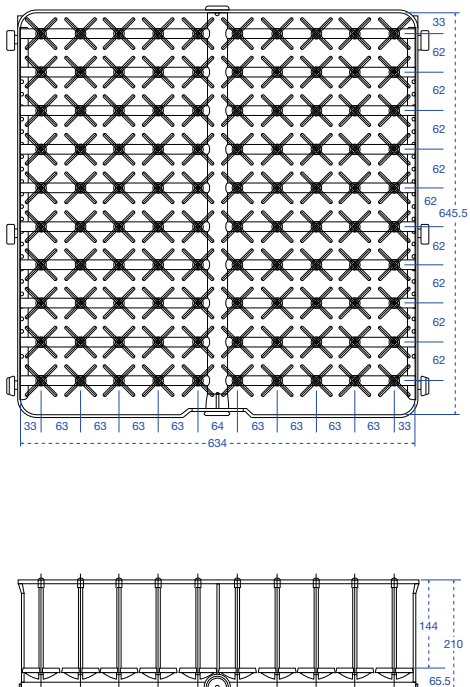

Catalog No. 100 IXL 16

Injector Rack Covers

Injector rack covers are available to secure small or lightweight labware during the wash cycle.

	1600 LXP
Full-size	GCI 16

Extra Long Injectors, 12" (305 mm) tall

For inside out cleaning of narrow neck glassware, bottles, cylinders, boiling flasks, Erlenmeyer flasks and large volumetric flasks.

	1600 LXP
1 long jet, 12.7 mm diameter, with spray ball	1 IXL 16
2 long jets, 12.7 mm diameter, with spray ball	2 IXL 16
4 long jets, 12.7 mm diameter, with spray ball	4 IXL 16

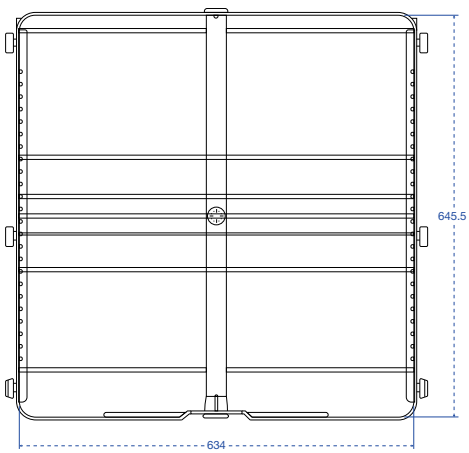

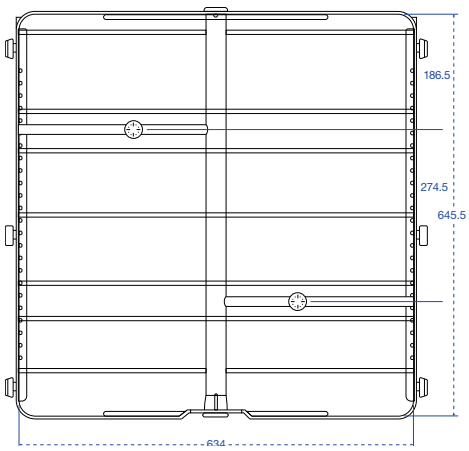

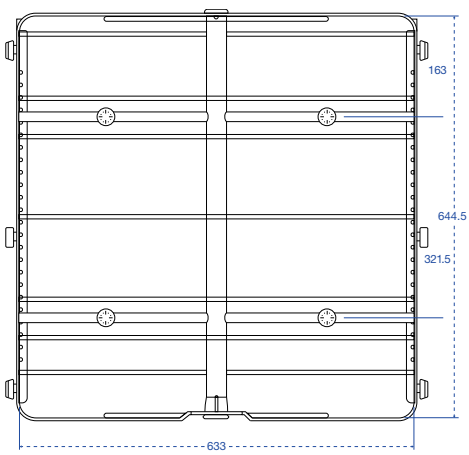

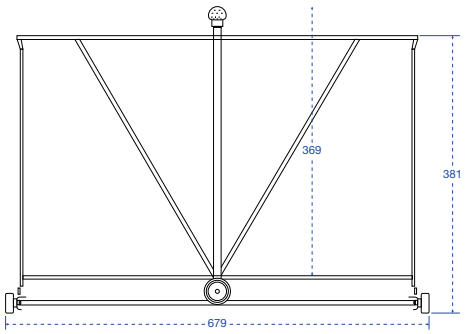

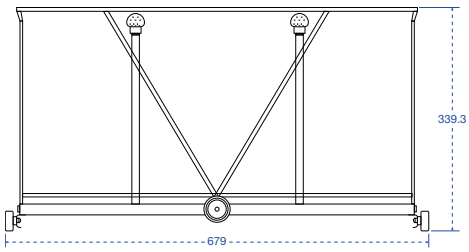

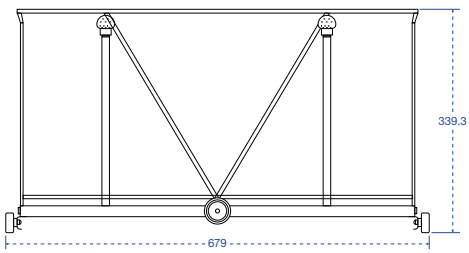

Catalog No. 1 IXL 16

Catalog No. 2 IXL 16

Catalog No. 4 IXL 16

Combination Short/Long Injectors

For inside out cleaning of mixed loads of narrow neck glassware, bottles, cylinders, boiling flasks, Erlenmeyer flasks and volumetric flasks.

	1600 LXP
36 short and long jets, 6 mm diameter	36 IXLC 16
64 short and long jets, 6 mm diameter	64 IXLC 16
80 short and long jets, 6 mm diameter	80 IXLC 16
100 short and long jets, 6 mm diameter	100 IXLC 16

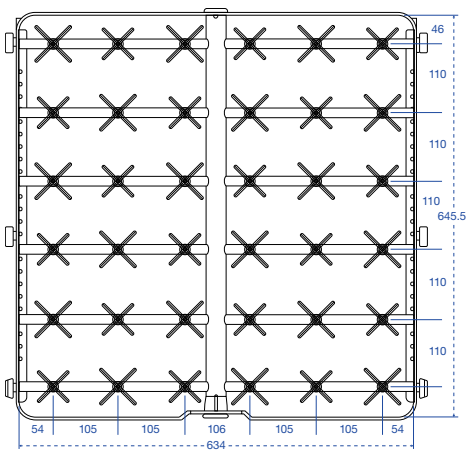

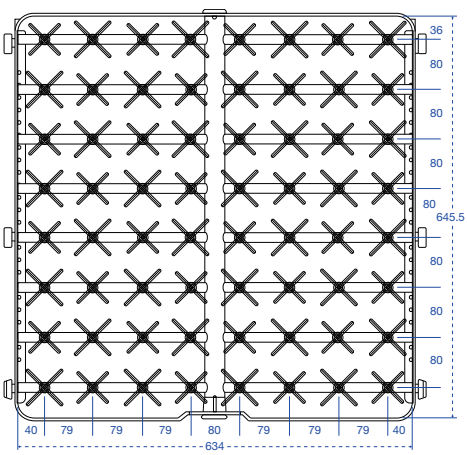

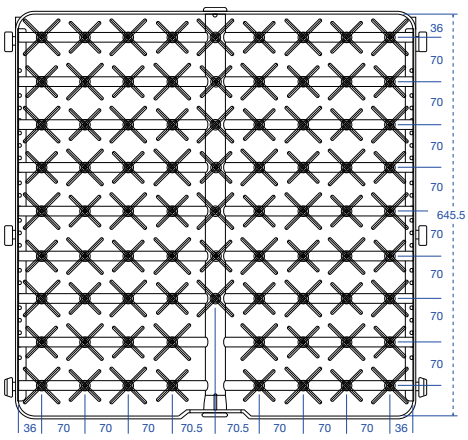

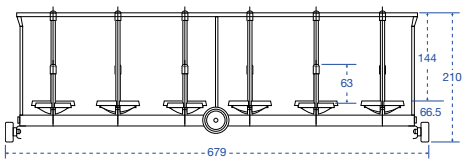

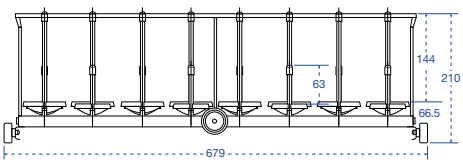

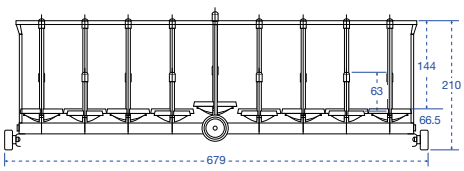

Catalog No. 36 IXLC 16

Catalog No. 64 IXLC 16

Catalog No. 80 IXLC 16

Pipette Racks

Accessory pipette racks are configured to accommodate reusable pipettes.

	1600 LXP
Grommet style, individually loaded, 105 position	105 PIP 16
Grommet style, individually loaded, 210 position	210 PIP 16

Storage Stand

An accessory storage stand offers a convenient place to store accessory racks and baskets when not in use.

	1600 LXP
Holds up to 5 racks	RP 16

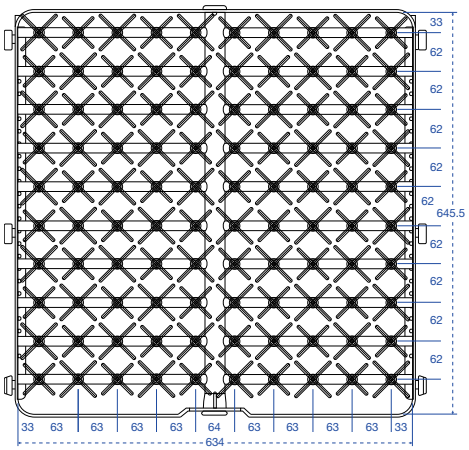

Catalog No. 100 IXLC 16

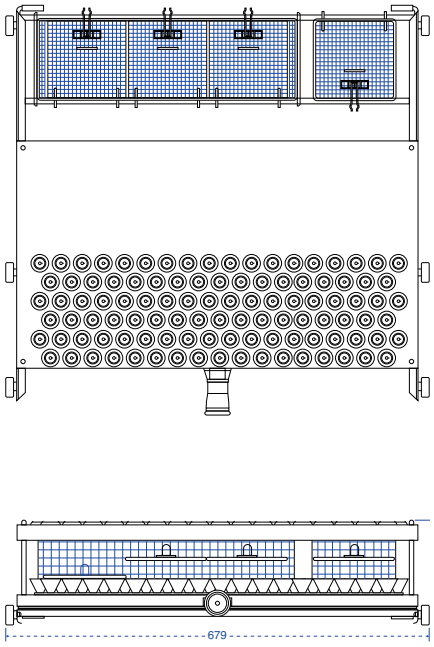

Catalog No. 105 PIP 16

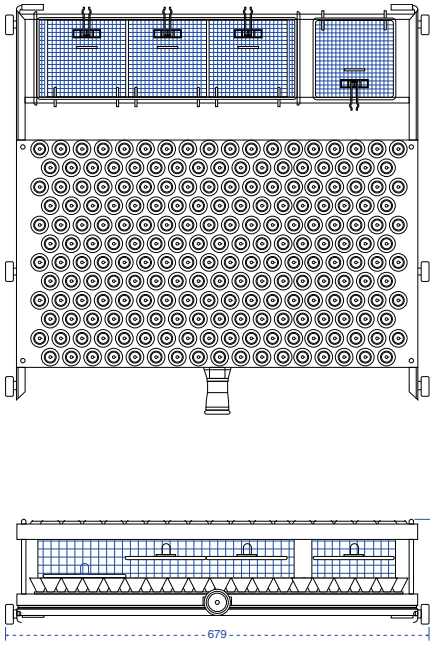

Catalog No. 210 PIP 16

Supports

Stainless steel. Fits inside open basket to permit placement of load at an angle.

	1600 LXP
Standard support, short, 3 1/2" (85 mm)	SSC 16
Standard support, short, 1/3 PST 16 Surface	SSC 1/3 PS 16
Standard support, tall, 6" (150 mm)	SSL 16
Standard support, tall, 1/3 PST 16 Surface	SSL 1/3 PS 16

Trolley

The stainless steel loading trolley transfers the load and mates with the washer to simplify loading and unloading. The trolley includes a retainer lip to keep the floor dry from residual water. Includes locking casters.

	1600 LXP
Trolly, 4 levels	TN 16

Count on **quality.**

Customer Service. Lancer offers a range of customer services before, during and after installation. These include technical service and support, preventive maintenance plans, and operator training and education. Contact Lancer for details.

Detergents and Rinsing Agents. For best results Lancer offers a selection of detergents and rinse agents formulated to maximize the performance of the Lancer labware washer while minimizing water consumption. Available exclusively from Lancer, these cleaning chemicals are made specifically for use in high pressure washers. To order call 407-327-8488 or contact chemsales@lancer.com.

- LancerClean Detergent is available in three solutions formulated for cleaning all different types of contaminants including laboratory soils, “baked on” organic residues, petroleum applications and other hard to clean soils. LancerClean is ideal for cleaning glassware, surgical instruments and many other labware items.

LCD-P is a potassium hydroxide based solution that provides excellent cleaning results for all types of contaminants and standard laboratory soils. It is recommended for use in all glassware washers.

LCD-S is a sodium hydroxide based solution specifically formulated to provide exceptional cleaning for the most difficult types of contaminants.

LCD-H is a low pH detergent comprised of a sodium silicate solution.

- LancerAcid Rinse is available in three formulas to meet specific cleaning requirements. Used as a rinsing agent following LancerClean detergent in the wash cycle, LancerAcid provides excellent results following washing of standard laboratory soils, organics, pharmaceutical based contaminants, petroleum and other difficult materials.

LCD-A is an acetic acid based neutralizing solution. It is the most commonly used rinsing agent.

LCD-C is an excellent rinsing agent with a citric acid based solution.

LCD-P is a phosphoric acid solution.

Lancer Undercounter Labware Washers. Lancer offers a line of compact undercounter labware washers for lower volume washing requirements. These washers are available in three models with two size options. Contact Lancer for details.

ULTIMA series labware washers

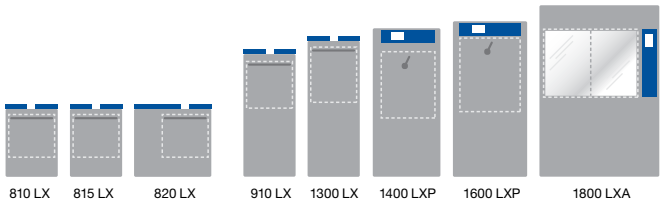

© Lancer 2778-ultima-freestanding-brochure-160216-enus OW108111 05/2016 Specifications subject to change without notice.

LANCER
GETINGE GROUP

1150 Emma Oaks Trail, Suite 140
Lake Mary, FL 32746 USA
Phone: +1 407.327.8488

www.lancer.com

GETINGE GROUP

Getinge Group is a leading global provider of innovative solutions for operating rooms, intensive-care units, hospital wards, sterilization departments, elderly care and for life science companies and institutions. With a genuine passion for life we build quality and safety into every system. Our unique value proposition mirrors the continuum of care, enhancing efficiency throughout the clinical pathway. Based on our first-hand experience and close partnerships, we are able to exceed expectations from customers – improving the every-day life for people, today and tomorrow.